FPHM REV01/25

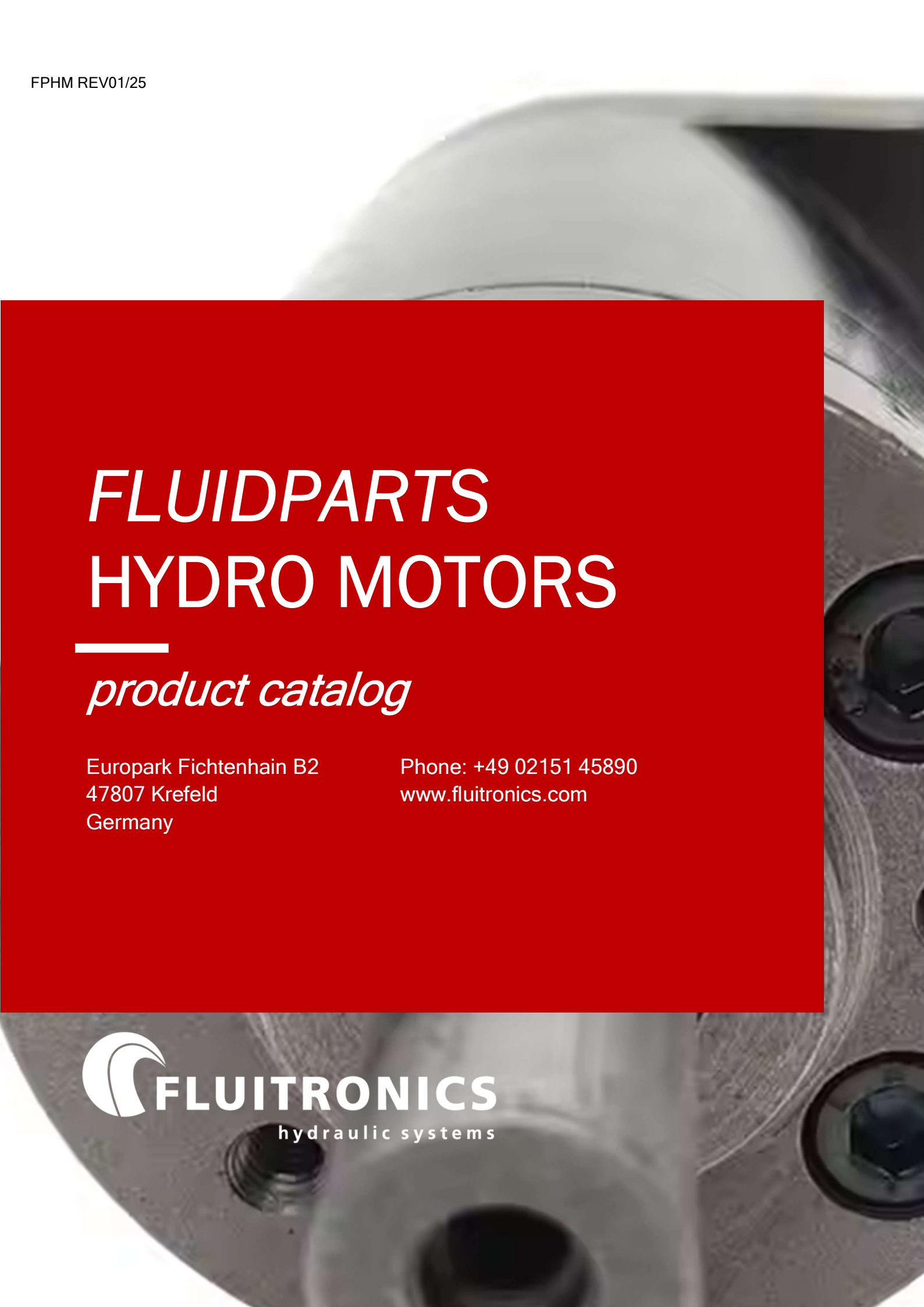

# *FLUIDPARTS*
# HYDRO MOTORS

## *product catalog*

Europark Fichtenhain B2
47807 Krefeld
Germany

Phone: +49 02151 45890
www.fluitronics.com

FLUITRONICS
hydraulic systems

# Table of Contents

Usage Guide....3
Specification Data o Hydraulic Motors....4
FPMM Series Hydraulic Motor....5
FPMP Series Hydraulic Motor....16
OZ Series Hydraulic Motor....32
FPMR Series Hydraulic Motor....36
OK Series Hydraulic Motor....55
FPMH Series Hydraulic Motor....58
FPMSY Series Hydraulic Motor....66
FPMT Series Hydraulic Motor....80
FPMV Series Hydraulic Motor....97
FPMK2 Series Hydraulic Motor....105
FPMK6 Series Hydraulic Motor....114
FPME2 Series Hydraulic Motor....121
FPMJ Series Hydraulic Motor....132
FPMER Series Hydraulic Motor....136
FPK10 Series Static Wet Hydraulic Brake....157
FPK2 Series Hydraulic Brake....164
WGB Series Planetary Gearbox....171
HGB Series Planetary Gearbox....176
Crossover Relief Valve....180
Crossover Relief Valve for FPMR Series Hydraulic Motors....181
Crossover Relief Valve for FPMS Series Hydraulic Motors....181
Overcenter Valve with Brake Port....184
Overcenter Valve for FPMR Motor....184
Cartridge Type Overcenter Valve....186
Fluitronics Contact Data....187

# Usage Guide

In order to make the motors working in optimal situation, we recommend the following:

1) Oil temperature: normal 20°C – 60°C upper limit 90°C (no more than one hour).
2) Filtering and oil cleanliness: A return filter should be installed in the system with a fineness in the range of 10~30 μm and a piece of magnet should be installed at the bottom of the tank to prevent grits into the system. The max. solid contamination grade of the oil is no more than 19/16.
3) Viscosity: 42-74 mm²/s at 40°C of oil temperature, according to the condition to choose an applicable hydraulic oil.
4) The motors can be operated in parallel or in series. When the pressure of the back exceeds 2 MPa, it is necessary to install an external drain line to the tank.
5) For FPMM and FPMP and FPMR series motors, the type of output shaft may be chosen in demand.
    a. The output shaft permits a radial force with the radial bearing.
    b. The output shaft doesn't permit the radial force without the radial bearing. When the radial force acts on the shaft, the force must be discharged.
6) For FPMK2, FPMSY, FPMT, FPMV and FPMK6 series motors, the output shaft permit high axial and radial forces.
7) The optimal operation situation should be at the 1/3~2/3 of the rated operation situation.
8) In order to obtain a longer life of operating motor should operate motors at first for one hour under 30% of rated pressure. In any case, be sure to fill up with hydraulic oil inside motor before increasing load.

# Specification Data of Hydraulic Motors

| Distribution type | Model | Displace-ment ($cm^3/rev.$) | Max. operating pressure (MPa) | Speed range (rpm) | Max. output power (kW) |
|---|---|---|---|---|---|
| Axial distribution | FPMM | 8~50 | 14 | 30-1950 | 3.2 |
| | FPMP | 36~400 | 16.5 | 30~879 | 10 |
| | FPMR | 36~375 | 20 | 30~970 | 15 |
| | FPMH | 200~500 | 20 | 30~430 | 17 |
| Disc distribution | FPMSY | 80~475 | 22.5 | 8~800 | 24 |
| | FPMT | 160~800 | 24 | 10~705 | 35 |
| | FPMV | 315~800 | 28 | 10~446 | 43 |

# FPMM SERIES HYDRAULIC MOTOR

FPMM series motor are small volume, economical type, which is designed with shaft distribution flow, which adapt the Gerotor gear set design and provide compact volume, high power and low weight.

**Characteristic features:**

- Advanced manufacturing devices for the Gerotor gear set, which provide small volume, high efficiency and long life.
- Shaft seal can bear high pressure of motor of which can be used in parallel or in series.
- Advanced construction design, high power and low weight.

## *Main Specification*

| *Type* | | *FPMM 8* | *FPMM 12.5* | *FPMM20* | *FPMM 32* | *FPMM 40* | *FPMM 50* |
|---|---|---|---|---|---|---|---|
| *displacement (cm³/rev)* | | 8.2 | 12.9 | 19.9 | 31.6 | 39.8 | 50.3 |
| *Max. speed (rpm)* | *cont.* | 1950 | 1550 | 1000 | 630 | 500 | 400 |
| | *int.* | 2450 | 1940 | 1250 | 800 | 630 | 500 |
| *Max. torque (Nm)* | *cont.* | 11 | 16 | 25 | 40 | 45 | 46 |
| | *int.* | 15 | 23 | 35 | 57 | 70 | 88 |
| | *peak* | 21 | 33 | 51 | 64 | 82 | 100 |
| *Max. output (kW)* | *cont.* | 1.8 | 2.4 | 2.4 | 2.4 | 2.2 | 1.8 |
| | *int.* | 2.6 | 3.2 | 3.2 | 3.2 | 3.2 | 3.2 |
| *Max. pressure drop (MPa)* | *cont.* | 10 | 10 | 10 | 10 | 9 | 7 |
| | *int.* | 14 | 14 | 14 | 14 | 14 | 14 |
| | *peak* | 20 | 20 | 20 | 16 | 16 | 16 |
| *Max. flow (L/min)* | *cont.* | 16 | 20 | 20 | 20 | 20 | 20 |
| | *int.* | 20 | 25 | 25 | 25 | 25 | 25 |
| *Weight (kg)* | | 1.9 | 2 | 2.1 | 2.2 | 2.3 | 2.4 |

| *Type* | | *Max.inlet pressure* |
|---|---|---|
| FPMM8-50 (MPa) | cont. | 17.5 |
| | int. | 22.5 |

- Continuous pressure: Max. value of operating motor continuously.
- Intermittent pressure: Max. value of operating motor in 6 seconds per minute.

- Peak pressure: Max. value of operating motor in 0.6 second per minute.

## *Performance Data*

### FPMM8 [8.2 cm³/rev]

| Flow (L/min) | Pressure (MPa) 3.5 | 5 | 7 | 10 | 12 | 14 |
|---|---|---|---|---|---|---|
| 2 | 3 **228** | 5 **218** | 8 **206** | 10 **156** | 12 **111** | 14 **58** |
| 4 | 3 **474** | 5 **471** | 7 **463** | 11 **426** | 13 **391** | 15 **331** |
| 8 | 3 **953** | 5 **946** | 7 **926** | 11 **884** | 13 **855** | 15 **816** |
| 12 | 2 **1444** | 5 **1426** | 7 **1402** | 10 **1360** | 13 **1324** | 15 **1288** |
| Max.cont. 15 | | 4 **1912** | 7 **1900** | 10 **1861** | 12 **1833** | 14 **1780** |
| Max.int. 20 | | | 6 **2395** | 10 **2350** | 11 **2328** | 14 **2281** |

### FPMM12.5 [12.9 cm³/rev]

| Flow (L/min) | Pressure (MPa) 3.5 | 5 | 7 | 10 | 12 | 14 |
|---|---|---|---|---|---|---|
| 2 | 6 **140** | 8 **136** | 11 **119** | 16 **68** | 19 **35** | |
| 4 | 6 **296** | 8 **289** | 12 **274** | 17 **229** | 19 **200** | 23 **145** |
| 8 | 5 **605** | 8 **596** | 12 **583** | 17 **543** | 20 **514** | 24 **469** |
| 12 | 5 **912** | 8 **905** | 11 **895** | 16 **859** | 20 **834** | 24 **784** |
| 15 | 5 **1152** | 7 **1144** | 11 **1136** | 16 **1102** | 19 **1078** | 23 **1036** |
| Max.cont. 20 | 3 **1542** | 7 **1532** | 10 **1521** | 15 **1500** | 19 **1482** | 22 **1437** |
| Max.int. 25 | 2 **1910** | 6 **1891** | 9 **1878** | 14 **1848** | 18 **1828** | 22 **1788** |

### FPMM20 [19,9 cm³/rev]

| Flow (L/min) | Pressure (MPa) 1.7 | 3.5 | 5 | 7 | 10 | 12 | 14 |
|---|---|---|---|---|---|---|---|
| 2 | 3 **99** | 9 **96** | 14 **89** | 19 **74** | 26 **42** | 30 **21** | |
| 4 | 4 **197** | 9 **191** | 14 **182** | 19 **178** | 26 **134** | 31 **112** | 36 **74** |
| 8 | 4 **398** | 9 **395** | 13 **391** | 19 **377** | 27 **340** | 31 **319** | 36 **288** |
| 12 | 3 **596** | 8 **594** | 13 **588** | 18 **579** | 26 **545** | 31 **523** | 37 **493** |
| 15 | 3 **745** | 8 **741** | 12 **738** | 17 **728** | 25 **695** | 30 **684** | 36 **660** |
| Max.cont. 20 | 1 **998** | 6 **995** | 11 **991** | 19 **985** | 24 **962** | 29 **916** | 35 **885** |
| Max.int. 25 | | 4 **1247** | 9 **1245** | 14 **1242** | 23 **1189** | 28 **1180** | 33 **1176** |

### FPMM32 [31,6 cm³/rev]

| Flow (L/min) | Pressure (MPa) 2 | 3.5 | 5 | 7 | 10 | 12 | 14 |
|---|---|---|---|---|---|---|---|
| 2 | 7 **61** | 15 **57** | 21 **52** | 28 **47** | 40 **16** | | |
| 4 | 7 **126** | 15 **121** | 21 **114** | 29 **106** | 41 **82** | 48 **67** | 57 **49** |
| 8 | 7 **250** | 15 **244** | 21 **239** | 29 **231** | 41 **207** | 49 **194** | 58 **167** |
| 12 | 6 **378** | 13 **374** | 20 **369** | 28 **362** | 40 **338** | 48 **322** | 58 **297** |
| 15 | 4 **476** | 12 **472** | 18 **468** | 27 **462** | 39 **441** | 47 **429** | 57 **406** |
| Max.cont. 20 | 3 **633** | 10 **630** | 17 **627** | 25 **619** | 37 **601** | 46 **585** | 55 **566** |
| Max.int. 25 | 1 **791** | 8 **789** | 15 **787** | 23 **783** | 35 **766** | 43 **753** | 52 **732** |

## FPMM40 [39.8 cm³/rev]

Pressure (MPa)

| Flow (L/min) | 3 | 5 | 7 | 8.5 (Max.cont.) | 10 | 12 (Max.int.) |
|---|---|---|---|---|---|---|
| 2 | 16 / **45** | 27 / **40** | 36 / **34** | 44 / **28** | 51 / **17** | |
| 4 | 16 / **96** | 27 / **93** | 37 / **85** | 44 / **79** | 52 / **65** | 62 / **52** |
| 8 | 15 / **197** | 26 / **195** | 36 / **182** | 44 / **176** | 52 / **166** | 63 / **154** |
| 12 | 14 / **293** | 25 / **287** | 35 / **282** | 43 / **277** | 51 / **268** | 62 / **257** |
| 15 | 13 / **371** | 24 / **365** | 34 / **360** | 42 / **355** | 50 / **347** | 62 / **338** |
| 20 (Max.cont.) | 10 / **497** | 21 / **492** | 31 / **487** | 39 / **480** | 48 / **472** | 59 / **463** |
| 25 (Max.int.) | 7 / **622** | 19 / **617** | 29 / **612** | 37 / **607** | 44 / **600** | 56 / **591** |

Torque (N•m) 37
Speed (rpm) **607**

## FPMM50 [50.3 cm³/rev]

Pressure (MPa)

| Flow (L/min) | 1.5 | 3 | 5 | 7 (Max.cont.) | 10 (Max.int.) |
|---|---|---|---|---|---|
| 2 | 11 / **37** | 23 / **33** | 36 / **27** | 50 / **22** | |
| 4 | 11 / **76** | 22 / **73** | 36 / **68** | 50 / **63** | 70 / **55** |
| 8 | 11 / **157** | 21 / **154** | 35 / **149** | 50 / **145** | 71 / **137** |
| 12 | 11 / **237** | 20 / **234** | 33 / **231** | 49 / **226** | 71 / **218** |
| 15 | 10 / **296** | 18 / **295** | 32 / **294** | 47 / **288** | 69 / **282** |
| 20 (Max.cont.) | 8 / **395** | 14 / **395** | 29 / **393** | 44 / **390** | 64 / **381** |
| 25 (Max.int.) | 4 / **498** | 10 / **496** | 25 / **494** | 40 / **490** | 59 / **484** |

cont.
int.

# *FPMM END PORT DIMENSIONS AND MOUNTING DATA - MOUNTING*

Flange M, U

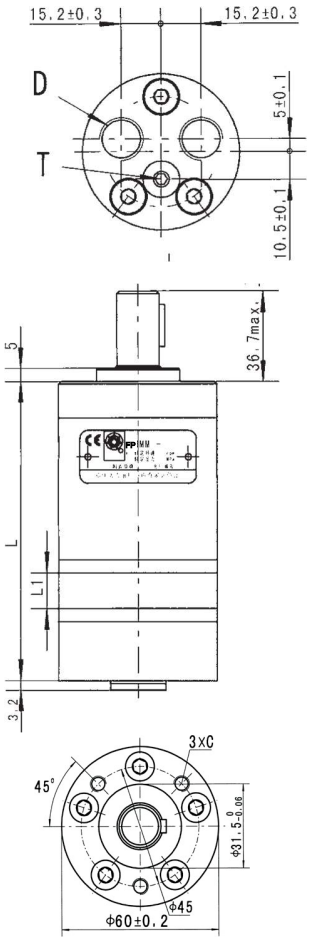


Flange F

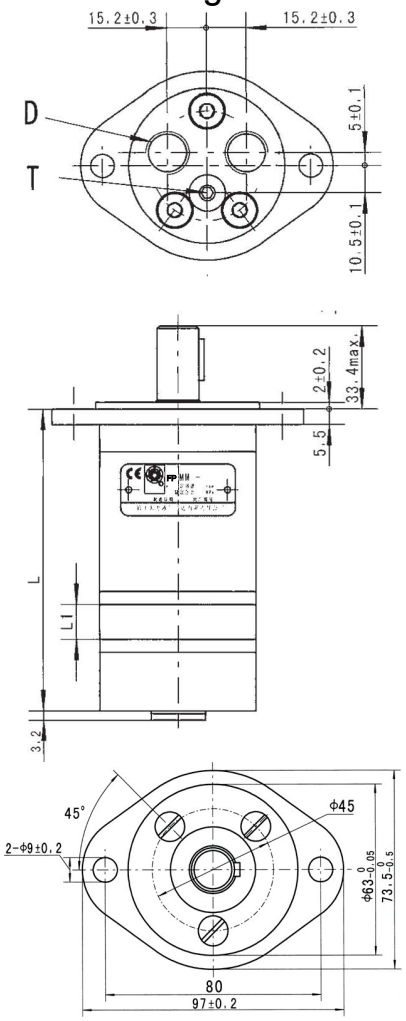


| | *M, U Flange* | | *F Flange* | |
|---|---|---|---|---|
| *Code* / *Mounting* | *1E (depth)* | *1U (depth)* | *1E (depth)* | *1U (depth)* |
| C | [M]3-M6 (10) | [U]3-1/4-28UNF-2B(10) | [M]-- | [U]-- |
| D | G3/8 (12) | 9/16-18UNF(12) | G3/8 (12) | 9/16-18UNF(12) |
| T | G1/8 (8) | 3/8-24UNF(8) | G1/8 (8) | 3/8-24UNF(8) |

## *FPMM SIDE PORT DIMENSIONS AND MOUNTING DATA -*

| | *M, U Flange* | | *F Flange* | |
|---|---|---|---|---|
| *Model* | *L* | *L1* | *L* | *L1* |
| FPMM8 | 104 | 3.5 | 107.5 | 3.5 |
| FPMM12.5 | 106 | 5.5 | 109.5 | 5.5 |
| FPMM20 | 109 | 8.5 | 112.5 | 8.5 |
| FPMM32 | 114 | 13.5 | 117.5 | 13.5 |
| FPMM40 | 117.5 | 17 | 121 | 17 |
| FPMM50 | 122 | 21.5 | 125.5 | 21.5 |

## *MOUNTING*

Flange M, U

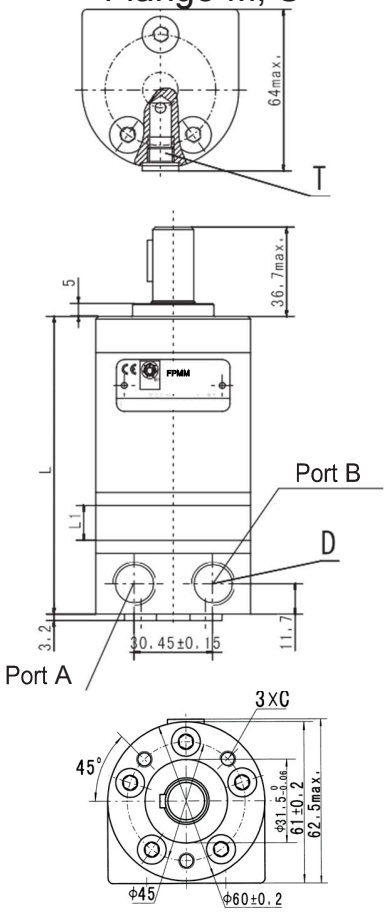


Flange F

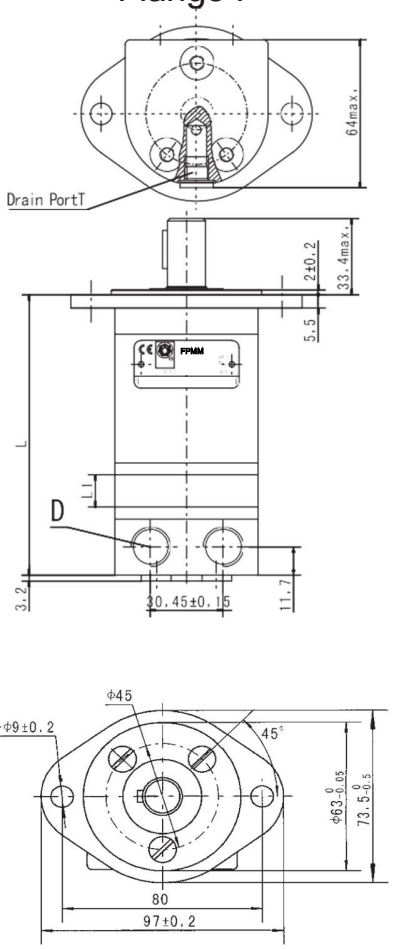

| | M, U Flange | | F Flange | |
|---|---|---|---|---|
| Code / Mounting | E (depth) | U (depth) | E (depth) | U (depth) |
| C | [M]3-M6 (10) | [U]3-1/4-28UNF-2B(10) | [M]-- | [U]-- |
| D | G3/8 (12) | 9/16-18UNF(12) | G3/8 (12) | 9/16-18UNF(12) |
| T | G1/8 (8) | 3/8-24UNF(8) | G1/8 (8) | 3/8-24UNF(8) |

| | M、U Flange | | F Flange | |
|---|---|---|---|---|
| Model | L | L1 | L | L1 |
| FPMM 8 | 105 | 3.5 | 108.5 | 3.5 |
| FPMM 12.5 | 107 | 5.5 | 110.5 | 5.5 |
| FPMM 20 | 110 | 8.5 | 113.5 | 8.5 |
| FPMM 32 | 115 | 13.5 | 118.5 | 13.5 |
| FPMM 40 | 118.5 | 17 | 122 | 17 |
| FPMM 50 | 123 | 21.5 | 126.5 | 21.5 |

# FPMM SHAFT EXTENSIONS FOR FPMM MOTORS

Shaft A: Cylindrical shaft Ø16
Parallel key 5x5x16

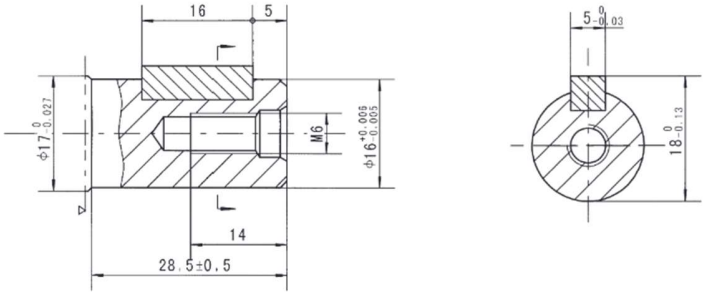


Shaft B: Cylindrical shaft Ø15.875
Parallel key 4.8x4.8x19.05

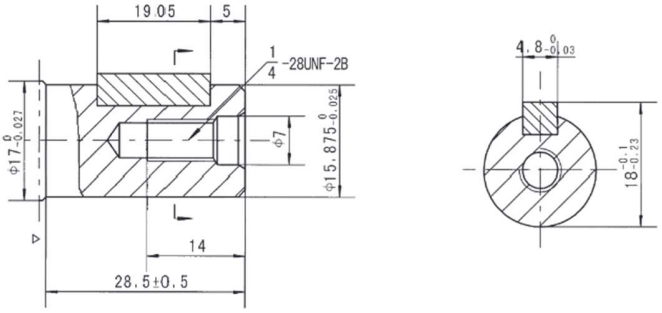


Shaft C: Involute splind shaft
B17x14 DIN5482

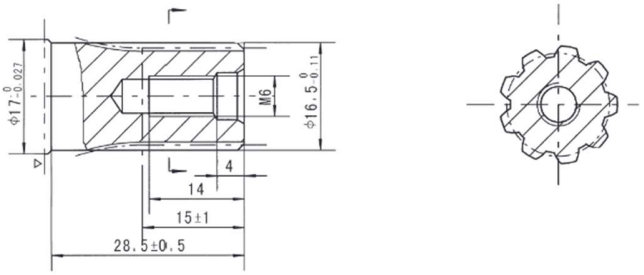


▷ Motor Mounting Surface

## *FPMM Series Hydraulic Motor - Permissible shaft seal pressure*

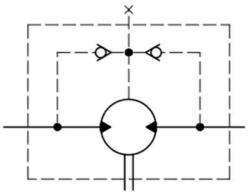

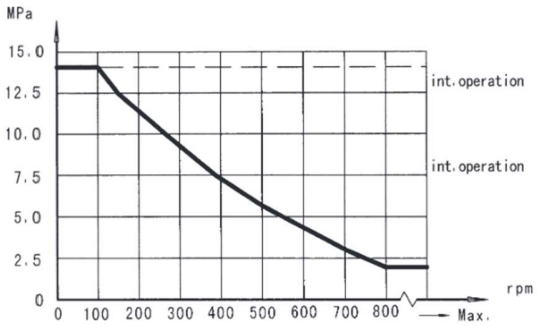


In applications without drain line, output shaft seal exceeds a bit of the pressure in the return line. When applications use the drain line, the pressure of output shaft seal equals the pressure in drain line.

## *Direction of shaft rotation: Standard*

When facing shaft end of motor, shaft to rotate:

- Clockwise when port "A" is pressurized.
- For Counter-clockwise port "B" is pressurized.

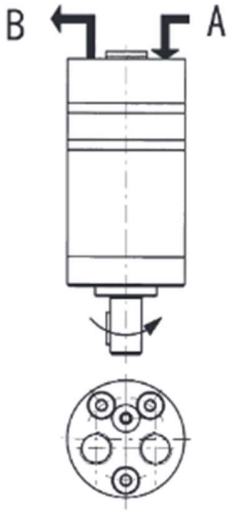


FPMM End Port

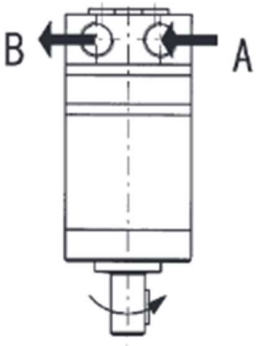


FPMM Side Port

*Status of the shaft's radial force*

$$F_r = \frac{13040}{61.5+L} \text{ daN}$$

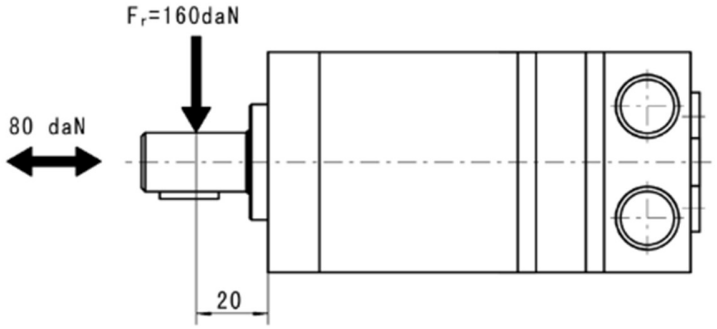


$F_r$ =Radial Force (daN)
L =Distance (mm)
n =Speed (rpm)
Max. force load
Rhomb-flange L=15mm
Square-flange L=20mm

## *Order Information*

FPMM 1 _ 2 _ 3 _ 4 _ 5 _ 6 _ 7 _ 8

| Pos.1 | 2 | 3 | | 4 | | 5 | | | 6 | | | 7 | | | 8 | |
|---|---|---|---|---|---|---|---|---|---|---|---|---|---|---|---|---|
| Code | Displacement | Flange | | Output shaft | | Ports and drain port | | | Rotation direction | | | Paint | | | Unusually function | |
| Omit | 8 | M | 3-M6 Circle-flange, pilot Ø31.5x5 | A | Shaft Ø16, parallel key 5x6x16 | E | G3/8, G1/8 | Omit | Omit | Standard | 00 | No paint | Omit | Standard | | |
| | 12.5 | U | 3-1/4-28UNF Circle flange,pilot Ø31.5x5 | B | Shaft Ø15.875, parallel key 4.8x4.8x19.05 | U | 9/16-18UNF, 3/8-24UNF | | R | Opposite | B | Blue | | | | |
| | 20 | F | 2-Ø9 Rhomb-flange, pilot Ø63x2 | C | Shaft Ø16.5, involute B17x14, DIN5482 | 1E | End port G3/8, G1/8 | | | | S | Black | | | | |
| | 32 | | | | | 1U | End port 9/16-18UNF, 3/8-24UNF | | | | | Silver grey | | | | |
| | 40 | | | | | | | | | | | | | | | |
| | 50 | | | | | | | | | | | | | | | |

Note:When the table is used, please fill the code of left rows in the table and give us, which the code information is consists of construction, displacement, mounting flange, output shaft and ports. If the specification is not in the table or you have specific requirements, please contact us.

# FPMP SERIES HYDRAULIC MOTOR

FPMP series motor are small volume, economical type, which is designed with shaft distribution flow, which adapt the Gerotor gear set design and provide compact volume, high power and low weight.

**Characteristic features:**

- Advanced manufacturing devices for the Gerotor gear set, which provide small volume, high efficiency and long life.
- Shaft seal can bear high pressure of motor of which can be used in parallel or in series.
- Advanced construction design, high power and low weight.

## *Main specification*

*Technical data for FPMP with 25 and 1 in and 1 in splined and 28.56 tapered shaft*

| *Type* | | *FPMP FPMPH FPMPW 36* | *FPMP FPMPH FPMPW 50* | *FPMP FPMPH FPMPW 80* | *FPMP FPMPH FPMPW 100* | *FPMP FPMPH FPMPW 125* | *FPMP FPMPH FPMPW 160* | *FPMP FPMPH FPMPW 200* | *FPMP FPMPH FPMPW 250* | *FPMP FPMPH FPMPW 315* | *FPMP FPMPH FPMPW 400* | *FPMP FPMPH FPMPW 500* |
|---|---|---|---|---|---|---|---|---|---|---|---|---|
| *displacement (cm³/rev)* | | 36 | 51.7 | 77.7 | 96.2 | 120.2 | 157.2 | 194.5 | 240.3 | 314.5 | 389.5 | 486.5 |
| *Max. speed (rpm)* | *cont.* | 1500 | 1150 | 770 | 615 | 490 | 383 | 310 | 250 | 192 | 155 | 120 |
| | *int.* | 1650 | 1450 | 960 | 770 | 615 | 475 | 385 | 310 | 240 | 190 | 150 |
| *Max. torque (Nm)* | *cont.* | 55 | 100 | 146 | 182 | 236 | 302 | 360 | 380 | 375 | 360 | 385 |
| | *int.* | 76 | 128 | 186 | 227 | 290 | 370 | 440 | 460 | 555 | 525 | 560 |
| | *peak* | 96 | 148 | 218 | 264 | 360 | 434 | 540 | 550 | 650 | 680 | 680 |
| *Max. output (kW)* | *cont.* | 8.0 | 10.0 | 10.0 | 11.0 | 10.0 | 10.0 | 10.0 | 8.5 | 7.0 | 6.0 | 5.0 |
| | *int.* | 11.5 | 12.0 | 12.0 | 13.0 | 12.0 | 12.0 | 12.0 | 10.5 | 8.5 | 7.0 | 6.0 |
| *Max. pressure drop (MPa)* | *cont.* | 12.5 | 14 | 14 | 14 | 14 | 14 | 14 | 11 | 9 | 7 | 6 |
| | *int.* | 16.5 | 17.5 | 17.5 | 17.5 | 17.5 | 17.5 | 17.5 | 14 | 14 | 10.5 | 9 |
| | *peak* | 22.5 | 22.5 | 22.5 | 22.5 | 22.5 | 22.5 | 22.5 | 18 | 16 | 14 | 12 |
| *Max. flow (L/min)* | *cont.* | 55 | 60 | 60 | 60 | 60 | 60 | 60 | 60 | 60 | 60 | 60 |
| | *int.* | 60 | 75 | 75 | 75 | 75 | 75 | 75 | 75 | 75 | 75 | 75 |
| *Weight (kg)* | | 5.6 | 5.6 | 5.7 | 5.9 | 6.0 | 6.2 | 6.4 | 6.7 | 6.9 | 7.4 | 8 |

- Continuous pressure: Max. value of operating motor continuously.
- Intermittent pressure: Max. value of operating motor in 6 seconds per minute.
- Peak pressure: Max. value of operating motor in 0.6 second per minute.

*Technical data for FPMP with 31.75 and 32 shaft*

| Type | | FPMP 36 | FPMP 50 | FPMP 80 | FPMP 100 | FPMP 125 | FPMP 160 | FPMP 200 | FPMP 250 | FPMP 315 | FPMP 400 | FPMP 500 |
|---|---|---|---|---|---|---|---|---|---|---|---|---|
| displacement (cm³/rev) | | 36 | 51.7 | 77.7 | 96.2 | 120.2 | 157.2 | 194.5 | 240.3 | 314.5 | 389.5 | 486.5 |
| Max. speed (rpm) | cont. | 1500 | 1150 | 770 | 615 | 490 | 383 | 310 | 250 | 192 | 155 | 120 |
| | int. | 1650 | 1450 | 960 | 770 | 615 | 475 | 385 | 310 | 240 | 190 | 150 |
| Max. torque (Nm) | cont. | 55 | 100 | 146 | 182 | 236 | 302 | 360 | 460 | 475 | 490 | 430 |
| | int. | 76 | 128 | 186 | 227 | 290 | 370 | 440 | 570 | 555 | 580 | 560 |
| | peak | 96 | 148 | 218 | 264 | 360 | 434 | 540 | 670 | 840 | 840 | 780 |
| Max. output (kW) | cont. | 8.0 | 10.0 | 10.0 | 11.0 | 10.0 | 10.0 | 10.0 | 8.5 | 7.0 | 6.0 | 6.0 |
| | int. | 11.5 | 12.0 | 12.0 | 13.0 | 12.0 | 12.0 | 12.0 | 10.5 | 8.5 | 7.0 | 7.0 |
| Max. pressure Drop (MPa) | cont. | 12.5 | 14 | 14 | 14 | 14 | 14 | 14 | 14 | 12 | 9.5 | 7 |
| | int. | 16.5 | 17.5 | 17.5 | 17.5 | 17.5 | 17.5 | 17.5 | 17.5 | 14 | 11.5 | 9 |
| | peak | 22.5 | 22.5 | 22.5 | 22.5 | 22.5 | 22.5 | 22.5 | 22.5 | 22.5 | 18 | 13 |
| Max. flow (L/min) | cont. | 55 | 60 | 60 | 60 | 60 | 60 | 60 | 60 | 60 | 60 | 60 |
| | int. | 60 | 75 | 75 | 75 | 75 | 75 | 75 | 75 | 75 | 75 | 75 |
| Weight (kg) | | 5.6 | 5.6 | 5.7 | 5.9 | 6.0 | 6.2 | 6.4 | 6.7 | 6.9 | 7.4 | 8.0 |

- Continuous pressure: Max. value of operating motor continuously.
- Intermittent pressure: Max. value of operating motor in 6 seconds per minute.
- Peak pressure: Max. value of operating motor in 0.6 second per minute.

## *Performance Data*

### FPMP 36 [36 cm³/rev]

| Flow (L/min) | Pressure (MPa) 3 | 6 | 7 | 8 | 10 | 11 | Max.cont. 12.5 | Max.int. 16.5 |
|---|---|---|---|---|---|---|---|---|
| 8 | 13 | 25 | 29 | 34 | 43 | 48 | | |
| | **214** | **205** | **200** | **194** | **187** | **179** | | |
| 15 | 13 | 25 | 29 | 34 | 43 | 48 | 56 | 75 |
| | **406** | **398** | **391** | **383** | **374** | **366** | **353** | **324** |
| 20 | 13 | 24 | 29 | 34 | 43 | 48 | 56 | 76 |
| | **541** | **534** | **528** | **521** | **513** | **500** | **486** | **458** |
| 30 | 12 | 24 | 29 | 34 | 43 | 48 | 56 | 76 |
| | **814** | **804** | **792** | **778** | **763** | **749** | **726** | **701** |
| 35 | 12 | 23 | 28 | 34 | 43 | 48 | 56 | 76 |
| | **952** | **944** | **930** | **913** | **897** | **879** | **858** | **833** |
| 40 | 12 | 23 | 28 | 32 | 41 | 47 | 55 | 75 |
| | **1090** | **1078** | **1064** | **1048** | **1024** | **998** | **977** | **943** |
| 45 | 11 | 22 | 26 | 32 | 41 | 46 | 54 | 74 |
| | **1232** | **1218** | **1196** | **1175** | **1149** | **1118** | **1080** | **1044** |
| Max.cont. 55 | 6 | 15 | 22 | 28 | 37 | 44 | 52 | 71 |
| | **1505** | **1494** | **1480** | **1466** | **1438** | **1406** | **1367** | **1309** |
| Max.int. 60 | 3 | 11 | 18 | 20 | 30 | 38 | 49 | 67 |
| | **1650** | **1640** | **1626** | **1603** | **1571** | **1536** | **1502** | **1446** |

### FPMP 50 [51.7 cm³/rev]

| Flow (L/min) | Pressure (MPa) 3 | 6 | 8 | 10 | 12.5 | Max.cont. 14 | 16 | Max.int. 17.5 |
|---|---|---|---|---|---|---|---|---|
| 8 | 20 | 41 | 56 | 69 | 89 | 95 | | |
| | **151** | **134** | **115** | **90** | **56** | **42** | | |
| 15 | 19 | 40 | 56 | 71 | 91 | 100 | 112 | 120 |
| | **286** | **274** | **261** | **243** | **204** | **182** | **139** | **102** |
| 20 | 18 | 39 | 55 | 71 | 92 | 101 | 117 | 128 |
| | **382** | **373** | **361** | **348** | **318** | **309** | **287** | **251** |
| 30 | 17 | 38 | 55 | 71 | 91 | 98 | 116 | 124 |
| | **573** | **568** | **558** | **535** | **503** | **488** | **462** | **440** |
| 35 | 17 | 38 | 54 | 69 | 89 | 98 | 117 | 124 |
| | **670** | **661** | **652** | **640** | **606** | **589** | **562** | **548** |
| 45 | 14 | 36 | 53 | 67 | 88 | 98 | 114 | 123 |
| | **863** | **858** | **849** | **837** | **807** | **788** | **764** | **746** |
| 55 | 12 | 33 | 50 | 65 | 85 | 96 | 111 | 121 |
| | **1055** | **1042** | **1028** | **1010** | **979** | **963** | **947** | **920** |
| Max.cont. 60 | 10 | 32 | 47 | 64 | 83 | 94 | 108 | 119 |
| | **1150** | **1143** | **1126** | **1111** | **1079** | **1065** | **1043** | **1015** |
| Max.int. 75 | 6 | 25 | 42 | 56 | 76 | 87 | 101 | 112 |
| | **1440** | **1430** | **1416** | **1395** | **1367** | **1351** | **1335** | **1312** |

FLUIDPARTS HYDRO-MOTORS

## FPMP 80 [77.7 cm³/rev]

| Flow (L/min) | Pressure (MPa) 3 | 6 | 8 | 10 | 12.5 | 14 | 16 | 17.5 |
|---|---|---|---|---|---|---|---|---|
| 8 | 32 | 62 | 85 | 104 | 129 | 144 | | |
| | **97** | **87** | **74** | **55** | **33** | **22** | | |
| 15 | 32 | 63 | 84 | 107 | 126 | 144 | 165 | |
| | **186** | **181** | **170** | **154** | **132** | **118** | **86** | |
| 20 | 31 | 63 | 84 | 107 | 132 | 146 | 168 | 185 |
| | **251** | **243** | **236** | **225** | **207** | **196** | **178** | **155** |
| 30 | 31 | 62 | 83 | 106 | 131 | 146 | 168 | 186 |
| | **381** | **379** | **368** | **355** | **332** | **316** | **285** | **263** |
| 35 | 30 | 59 | 81 | 102 | 130 | 144 | 167 | 185 |
| | **443** | **435** | **426** | **415** | **397** | **383** | **361** | **342** |
| 45 | 25 | 58 | 79 | 100 | 126 | 142 | 165 | 182 |
| | **570** | **564** | **554** | **543** | **526** | **509** | **483** | **458** |
| 55 | 23 | 57 | 78 | 97 | 124 | 140 | 161 | 179 |
| | **696** | **685** | **672** | **656** | **643** | **630** | **602** | **579** |
| Max.cont. 60 | 20 | 53 | 75 | 94 | 120 | 137 | 160 | 177 |
| | **761** | **753** | **744** | **736** | **720** | **706** | **681** | **660** |
| Max.int. 75 | 14 | 44 | 67 | 87 | 112 | 151 | 169 | 169 |
| | **948** | **940** | **931** | **920** | **906** | **890** | **871** | **854** |

Torque (N•m) 87
Speed (rpm) **920**

## FPMP 100 [96.2 cm³/rev]

| Flow (L/min) | Pressure (MPa) 3 | 6 | 8 | 10 | 12.5 | 14 | 16 | 17.5 |
|---|---|---|---|---|---|---|---|---|
| 8 | 40 | 77 | 105 | 130 | 161 | 180 | | |
| | **81** | **75** | **69** | **57** | **36** | **24** | | |
| 15 | 39 | 77 | 106 | 130 | 160 | 180 | 208 | |
| | **152** | **149** | **145** | **140** | **122** | **103** | **81** | |
| 20 | 36 | 74 | 104 | 128 | 161 | 179 | 205 | 227 |
| | **204** | **200** | **195** | **190** | **177** | **166** | **148** | **133** |
| 30 | 33 | 72 | 103 | 125 | 160 | 177 | 203 | 225 |
| | **308** | **304** | **298** | **290** | **280** | **268** | **255** | **231** |
| 35 | 30 | 70 | 98 | 122 | 159 | 176 | 202 | 224 |
| | **360** | **352** | **343** | **331** | **320** | **306** | **294** | **275** |
| 45 | 29 | 67 | 95 | 118 | 155 | 174 | 200 | 220 |
| | **462** | **458** | **451** | **443** | **433** | **419** | **402** | **383** |
| 55 | 25 | 64 | 93 | 116 | 152 | 170 | 198 | 217 |
| | **566** | **558** | **549** | **540** | **529** | **515** | **498** | **478** |
| Max.cont. 60 | 22 | 60 | 91 | 114 | 149 | 167 | 194 | 213 |
| | **618** | **611** | **601** | **589** | **580** | **570** | **558** | **540** |
| Max.int. 75 | 15 | 54 | 83 | 106 | 141 | 160 | 186 | 205 |
| | **771** | **763** | **755** | **744** | **735** | **724** | **708** | **693** |

cont.
int.

## FPMP 125 [120.2 cm³/rev]

| Flow (L/min) | Pressure (MPa) 3 | 6 | 8 | 10 | 12.5 | 14 | 16 | 17.5 |
|---|---|---|---|---|---|---|---|---|
| 8 | 51 | 98 | 137 | 168 | 208 | 236 | | |
| | **63** | **60** | **55** | **47** | **28** | **15** | | |
| 15 | 51 | 101 | 138 | 168 | 209 | 236 | 267 | |
| | **121** | **116** | **110** | **102** | **89** | **73** | **48** | |
| 20 | 48 | 98 | 135 | 167 | 211 | 237 | 269 | 290 |
| | **162** | **158** | **153** | **148** | **137** | **128** | **109** | **94** |
| 30 | 46 | 96 | 132 | 164 | 209 | 232 | 264 | 287 |
| | **243** | **239** | **234** | **227** | **216** | **202** | **189** | **176** |
| 35 | 42 | 92 | 130 | 160 | 206 | 229 | 260 | 284 |
| | **284** | **279** | **274** | **269** | **259** | **247** | **231** | **222** |
| 45 | 37 | 89 | 125 | 157 | 201 | 224 | 261 | 281 |
| | **370** | **362** | **355** | **348** | **340** | **327** | **310** | **296** |
| 55 | 33 | 84 | 122 | 152 | 196 | 218 | 252 | 275 |
| | **452** | **446** | **438** | **431** | **420** | **412** | **402** | **384** |
| Max.cont. 60 | 29 | 78 | 117 | 146 | 191 | 215 | 248 | 272 |
| | **490** | **482** | **475** | **468** | **459** | **448** | **439** | **427** |
| Max.int. 75 | 18 | 66 | 107 | 133 | 179 | 202 | 236 | 260 |
| | **615** | **606** | **598** | **586** | **575** | **563** | **549** | **528** |

## FPMP 160 [157.2 cm³/rev]

| Flow (L/min) | Pressure (MPa) 3 | 6 | 8 | 10 | 12.5 | 14 | 16 | 17.5 |
|---|---|---|---|---|---|---|---|---|
| 8 | 62 | 120 | 170 | 212 | 263 | 290 | | |
| | **49** | **48** | **46** | **42** | **26** | **14** | | |
| 15 | 60 | 122 | 172 | 215 | 264 | 294 | 340 | |
| | **93** | **91** | **88** | **85** | **76** | **68** | **48** | |
| 20 | 57 | 120 | 170 | 214 | 262 | 290 | 340 | 371 |
| | **125** | **123** | **120** | **117** | **110** | **106** | **92** | **81** |
| 30 | 53 | 115 | 164 | 206 | 259 | 288 | 335 | 368 |
| | **187** | **184** | **181** | **178** | **175** | **168** | **155** | **139** |
| 35 | 49 | 110 | 160 | 202 | 255 | 284 | 328 | 362 |
| | **220** | **216** | **213** | **209** | **205** | **202** | **192** | **176** |
| 45 | 44 | 102 | 154 | 196 | 248 | 278 | 321 | 358 |
| | **283** | **280** | **276** | **272** | **267** | **260** | **250** | **238** |
| 55 | 40 | 99 | 148 | 191 | 243 | 272 | 316 | 351 |
| | **345** | **342** | **340** | **336** | **331** | **328** | **320** | **303** |
| Max.cont. 60 | 33 | 94 | 144 | 188 | 236 | 267 | 308 | 345 |
| | **377** | **374** | **371** | **367** | **363** | **359** | **353** | **342** |
| Max.int. 75 | 19 | 80 | 124 | 170 | 216 | 252 | 296 | 325 |
| | **473** | **469** | **465** | **459** | **453** | **447** | **440** | **424** |

## FPMP 200 [194.5 cm³/rev]

| Flow (L/min) | Pressure (MPa) 3 | 6 | 8 | 10 | 12.5 | 14 (Max.cont.) | 16 | 17.5 (Max.int.) |
|---|---|---|---|---|---|---|---|---|
| 8 | 79 / **40** | 164 / **39** | 207 / **38** | 250 / **35** | 320 / **28** | 360 / **22** | | |
| 15 | 78 / **76** | 162 / **75** | 205 / **74** | 250 / **71** | 322 / **66** | 361 / **61** | 410 / **51** | |
| 20 | 76 / **100** | 158 / **98** | 203 / **97** | 247 / **95** | 320 / **92** | 358 / **89** | 403 / **73** | 422 / **57** |
| 30 | 70 / **151** | 153 / **149** | 200 / **147** | 245 / **145** | 315 / **142** | 350 / **139** | 398 / **131** | 417 / **120** |
| 35 | 66 / **177** | 149 / **175** | 194 / **173** | 232 / **171** | 297 / **168** | 343 / **166** | 386 / **160** | 415 / **149** |
| 45 | 63 / **228** | 146 / **226** | 190 / **224** | 230 / **221** | 294 / **218** | 340 / **215** | 383 / **210** | 410 / **198** |
| 55 | 54 / **280** | 140 / **278** | 181 / **276** | 224 / **274** | 286 / **271** | 334 / **269** | 371 / **263** | 400 / **250** |
| 60 (Max.cont.) | 38 / **304** | 127 / **302** | 164 / **300** | 212 / **297** | 270 / **294** | 325 / **291** | 356 / **286** | 395 / **272** |
| 75 (Max.int.) | 22 / **382** | 96 / **378** | 145 / **374** | 192 / **371** | 235 / **368** | 293 / **364** | 321 / **360** | 367 / **350** |

cont.
int.

## FPMP 250 [240.3 cm³/rev]

| Flow (L/min) | Pressure (MPa) 3 | 6 | 8 | 10 | 12.5 | 14 | 16 (Max.cont.) | 17.5 (Max.int.) |
|---|---|---|---|---|---|---|---|---|
| 8 | 96 / **30** | 190 / **28** | 268 / **24** | 326 / **21** | 403 / **11** | | | |
| 15 | 98 / **60** | 194 / **58** | 270 / **54** | 327 / **50** | 405 / **40** | 450 / **30** | 510 / **12** | |
| 20 | 92 / **82** | 188 / **80** | 267 / **77** | 325 / **76** | 405 / **69** | 456 / **64** | 514 / **52** | 565 / **38** |
| 30 | 85 / **123** | 180 / **120** | 259 / **118** | 320 / **114** | 400 / **106** | 448 / **98** | 513 / **87** | 561 / **76** |
| 35 | 77 / **143** | 176 / **141** | 252 / **139** | 311 / **135** | 389 / **128** | 436 / **122** | 504 / **112** | 557 / **101** |
| 45 | 70 / **185** | 168 / **182** | 243 / **178** | 300 / **174** | 377 / **168** | 428 / **161** | 495 / **152** | 543 / **139** |
| 55 | 63 / **226** | 159 / **223** | 237 / **218** | 290 / **213** | 369 / **209** | 417 / **202** | 483 / **193** | 531 / **185** |
| 60 (Max.cont.) | 60 / **248** | 150 / **246** | 228 / **243** | 280 / **239** | 358 / **233** | 407 / **226** | 473 / **215** | 520 / **207** |
| 75 (Max.int.) | 34 / **309** | 128 / **306** | 202 / **302** | 264 / **297** | 342 / **292** | 387 / **286** | 448 / **278** | 488 / **264** |

Torque (N•m) 128
Speed (rpm) **306**

## FPMP 315 [314.5 cm³/rev]

| Flow (L/min) | Pressure (MPa) 3 | 5 | 7 | 9 | 10 | 12.5 (Max.cont.) | 14 (Max.int.) |
|---|---|---|---|---|---|---|---|
| 8 | 123 / **25** | 215 / **23** | 292 / **21** | 368 / **17** | 405 / **11** | | |
| 15 | 118 / **47** | 211 / **46** | 287 / **44** | 367 / **40** | 404 / **28** | 495 / **21** | 568 / **10** |
| 20 | 110 / **62** | 205 / **61** | 278 / **60** | 360 / **57** | 395 / **46** | 494 / **40** | 566 / **36** |
| 30 | 101 / **94** | 196 / **93** | 271 / **91** | 349 / **88** | 388 / **76** | 490 / **68** | 565 / **65** |
| 35 | 96 / **109** | 188 / **107** | 264 / **106** | 341 / **104** | 382 / **96** | 478 / **89** | 557 / **84** |
| 45 | 89 / **141** | 180 / **140** | 254 / **138** | 337 / **135** | 372 / **127** | 468 / **120** | 553 / **115** |
| 55 | 76 / **173** | 166 / **172** | 239 / **170** | 325 / **167** | 362 / **160** | 457 / **152** | 548 / **143** |
| 60 (Max.cont.) | 65 / **188** | 154 / **186** | 227 / **184** | 308 / **182** | 348 / **178** | 443 / **172** | 529 / **163** |
| 75 (Max.int.) | 40 / **236** | 120 / **234** | 201 / **232** | 279 / **228** | 323 / **226** | 418 / **223** | 497 / **214** |

## FPMP 400 [389.5 cm³/rev]

| Flow (L/min) | Pressure (MPa) 3 | 4.5 | 5.5 | 6.5 | 8 | 10 (Max.cont.) | 12.5 (Max.int.) |
|---|---|---|---|---|---|---|---|
| 8 | 166 / **20** | 232 / **19** | 287 / **18** | 340 / **16** | 418 / **12** | | |
| 15 | 165 / **38** | 228 / **36** | 277 / **35** | 337 / **33** | 417 / **31** | 496 / **27** | 612 / **21** |
| 20 | 162 / **50** | 223 / **49** | 273 / **49** | 331 / **48** | 413 / **45** | 495 / **41** | 608 / **35** |
| 30 | 154 / **76** | 216 / **75** | 266 / **74** | 318 / **73** | 405 / **71** | 486 / **67** | 600 / **60** |
| 35 | 146 / **88** | 210 / **87** | 256 / **87** | 312 / **86** | 395 / **83** | 480 / **80** | 588 / **75** |
| 45 | 132 / **114** | 197 / **113** | 243 / **112** | 300 / **110** | 383 / **108** | 464 / **106** | 576 / **99** |
| 55 | 117 / **139** | 184 / **137** | 227 / **136** | 283 / **135** | 363 / **135** | 450 / **132** | 552 / **123** |
| 60 (Max.cont.) | 102 / **153** | 163 / **152** | 215 / **150** | 272 / **148** | 347 / **146** | 436 / **143** | 532 / **138** |
| 75 (Max.int.) | 53 / **191** | 128 / **189** | 182 / **187** | 234 / **185** | 318 / **183** | 391 / **180** | 484 / **176** |

Torque (N•m) 234
Speed (rpm) **185**

FLUIDPARTS HYDRO-MOTORS

## FPMP 500 [486.5 cm³/rev]

| Flow (L/min) | Pressure (MPa) 1.5 | 3 | 4.5 | 6 (Max.cont.) | 7 | 8 | 9 (Max.int.) |
|---|---|---|---|---|---|---|---|
| 4 | 96<br>**7** | 194<br>**6** | 285<br>**4** | | | | |
| 8 | 98<br>**15** | 201<br>**15** | 304<br>**14** | 391<br>**14** | 443<br>**12** | 512<br>**9** | 574<br>**7** |
| 15 | 96<br>**30** | 192<br>**30** | 284<br>**29** | 380<br>**28** | 421<br>**26** | 496<br>**23** | 550<br>**22** |
| 20 | 96<br>**40** | 191<br>**40** | 280<br>**40** | 372<br>**39** | 418<br>**37** | 493<br>**33** | 546<br>**31** |
| 30 | 91<br>**61** | 185<br>**60** | 272<br>**60** | 360<br>**58** | 412<br>**56** | 486<br>**53** | 541<br>**50** |
| 40 | 86<br>**81** | 172<br>**80** | 261<br>**80** | 343<br>**79** | 408<br>**76** | 480<br>**73** | 538<br>**70** |
| 50 | 78<br>**102** | 160<br>**101** | 241<br>**100** | 332<br>**98** | 391<br>**96** | 466<br>**93** | 528<br>**90** |
| 60 (Max.cont.) | 66<br>**122** | 134<br>**121** | 213<br>**120** | 305<br>**119** | 371<br>**117** | 438<br>**114** | 496<br>**110** |
| 70 | 52<br>**143** | 111<br>**142** | 189<br>**141** | 292<br>**139** | 344<br>**137** | 418<br>**135** | 475<br>**131** |
| 75 (Max.int.) | 35<br>**153** | 83<br>**152** | 154<br>**151** | 241<br>**150** | 312<br>**149** | 389<br>**147** | 448<br>**144** |

cont.
int.

Torque (N•m) 389
Speed (rpm) **147**

# FPMP DIMENSION AND MOUNTING DATA

## MOUNTING

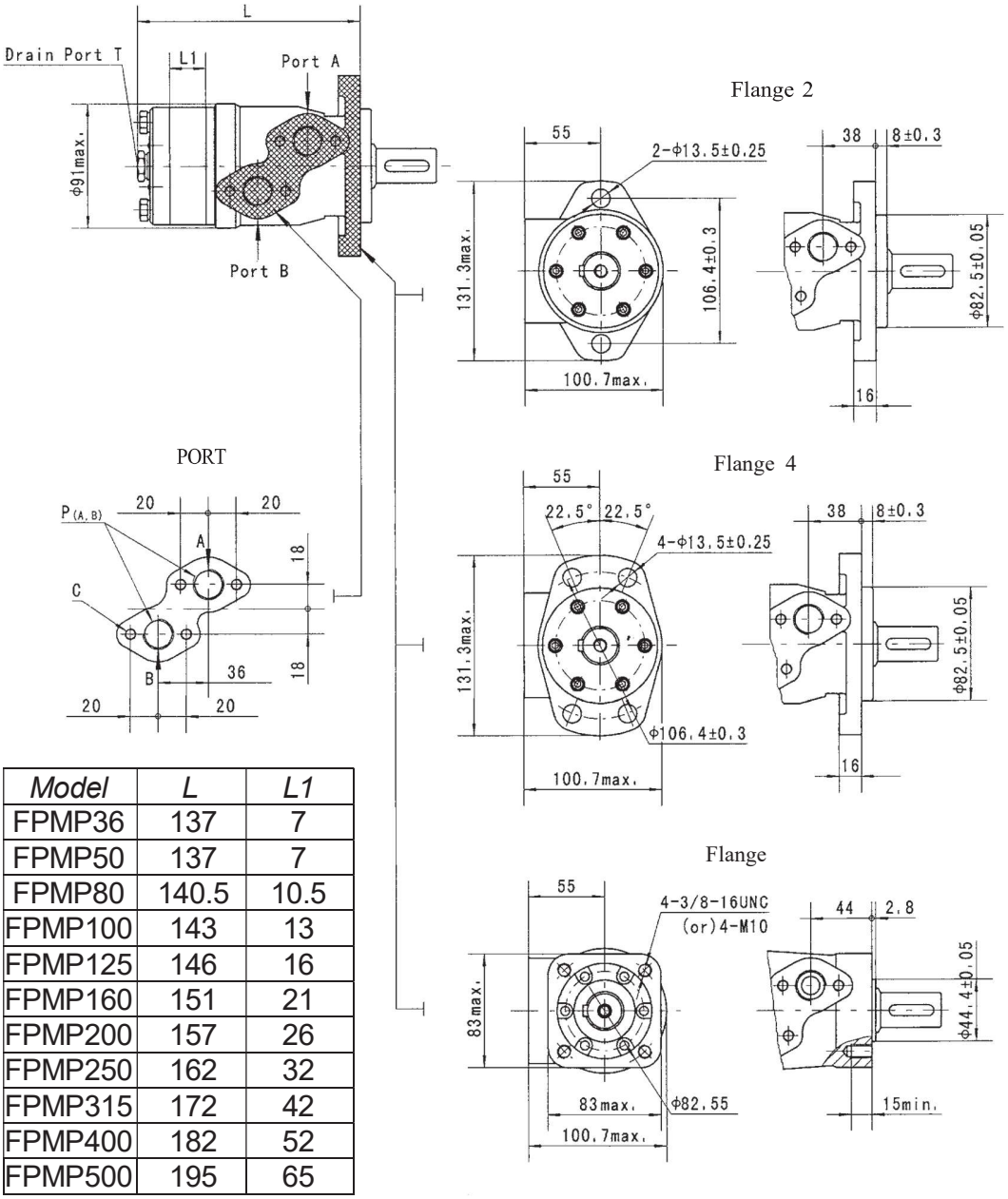


| Model | L | L1 |
|---|---|---|
| FPMP36 | 137 | 7 |
| FPMP50 | 137 | 7 |
| FPMP80 | 140.5 | 10.5 |
| FPMP100 | 143 | 13 |
| FPMP125 | 146 | 16 |
| FPMP160 | 151 | 21 |
| FPMP200 | 157 | 26 |
| FPMP250 | 162 | 32 |
| FPMP315 | 172 | 42 |
| FPMP400 | 182 | 52 |
| FPMP500 | 195 | 65 |

| Code / Mounting | D (depth) | M (depth) | S (depth) | P (depth) | R (depth) |
|---|---|---|---|---|---|
| P(A,B) | G1/2 (15) | M22 x 1.5 (15) | 7/8-14 O-ring (17) | 1/2-14NPTF (15) | PT(RC)1/2 (15) |
| C | 4-M8 (13) | 4-M8 (13) | 4-5/16-18UNC(13) | 4-5/16-18UNC(13) | 4-M8 (13) |
| T | G1/4 (12) | M14 x 1.5 (12) | 7/16-20UNF (12) | 7/16-20UNF (12) | PT(RC)1/4 (9.7) |

# FPMPH DIMENSIONS AND MOUNTING DATA

## MOUNTING

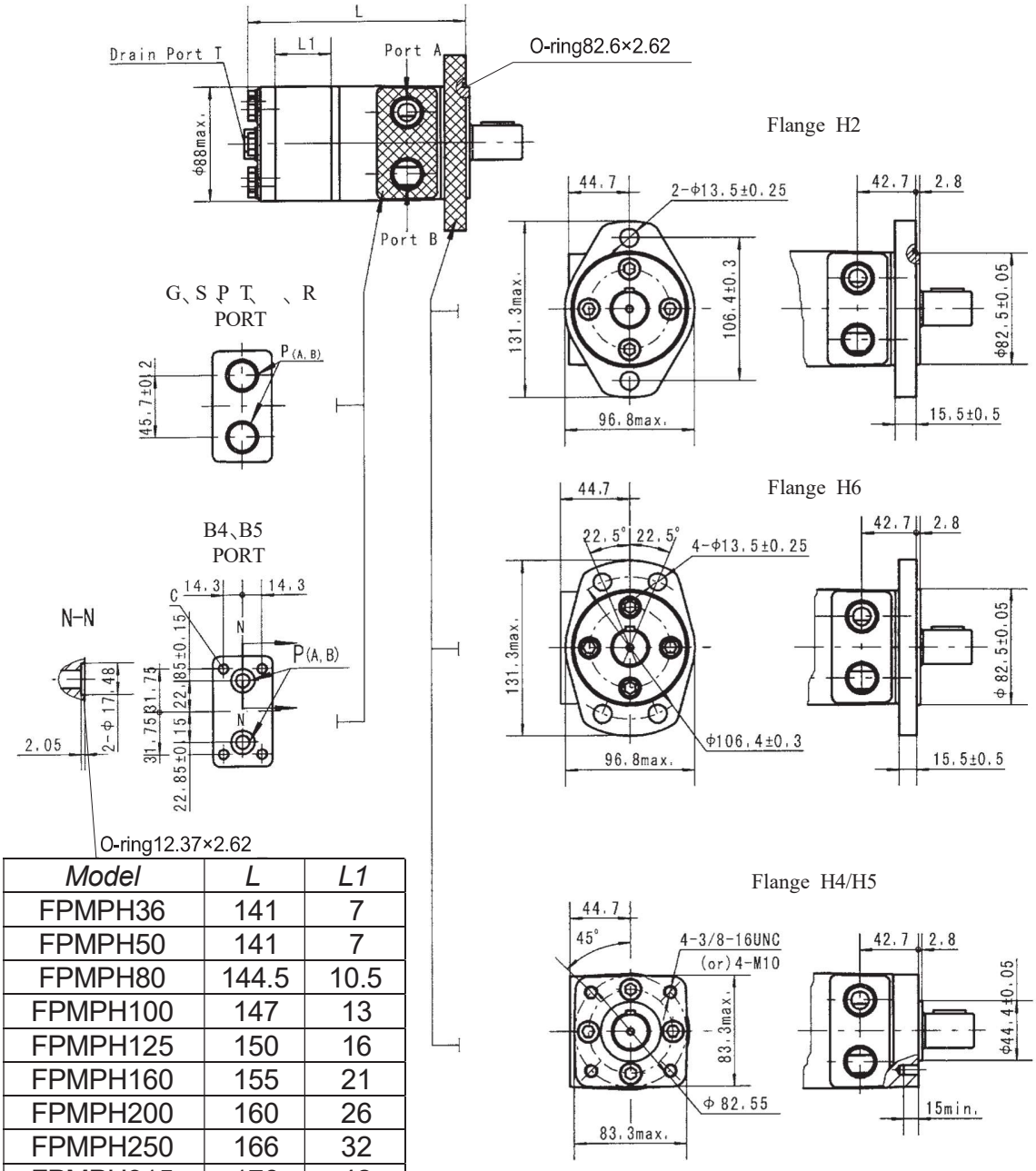


| Model | L | L1 |
|---|---|---|
| FPMPH36 | 141 | 7 |
| FPMPH50 | 141 | 7 |
| FPMPH80 | 144.5 | 10.5 |
| FPMPH100 | 147 | 13 |
| FPMPH125 | 150 | 16 |
| FPMPH160 | 155 | 21 |
| FPMPH200 | 160 | 26 |
| FPMPH250 | 166 | 32 |
| FPMPH315 | 176 | 42 |
| FPMPH400 | 186 | 52 |
| FPMPH500 | 199 | 65 |

| Code<br>Mounting | G (depth) | S (depth) | P (depth) | T (depth) | R (depth) | B4 (depth) | B5 (depth) |
|---|---|---|---|---|---|---|---|
| P(A,B) | G1/2 (15) | 7/8-14 O-ring (17) | 1/2-14NPTF (15) | 3/4-16 O-ring (15) | PT(RC)1/2 (15) | ø10 | ø10 |
| T | G1/4 (12) | 7/16-20UNF (12) | 7/16-20UNF (12) | 7/16-20UNF(12) | PT(RC)1/4 (9.7) | 7/16-20UNF(12) | G1/4(12) |
| C | – | – | – | – | – | 4-5/16-18UNC(13) | 4-M8(13) |

## *FPMP - SHAFT EXTENSIONS DIMENSIONS DATA*

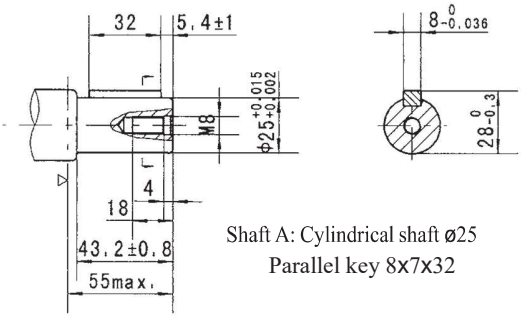


Shaft A: Cylindrical shaft ø25
Parallel key 8x7x32

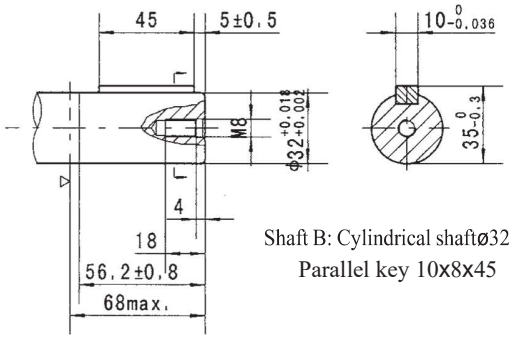


Shaft B: Cylindrical shaftø32
Parallel key 10x8x45

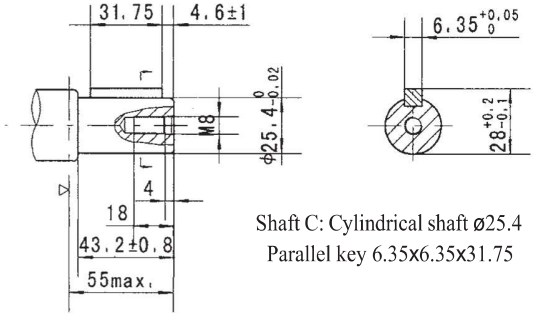


Shaft C: Cylindrical shaft ø25.4
Parallel key 6.35x6.35x31.75

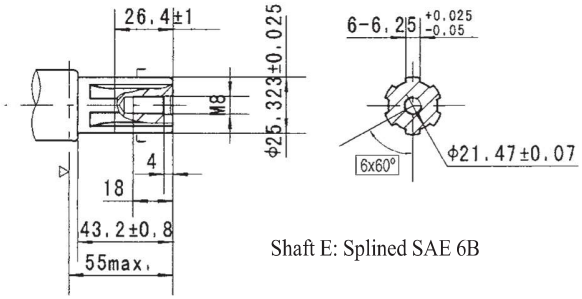


Shaft E: Splined SAE 6B

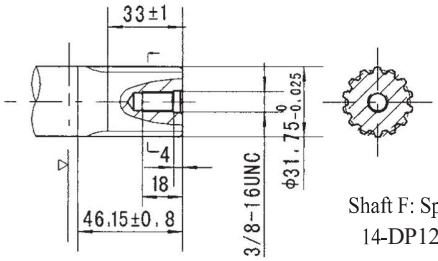


Shaft F: Splined
14-DP12/24

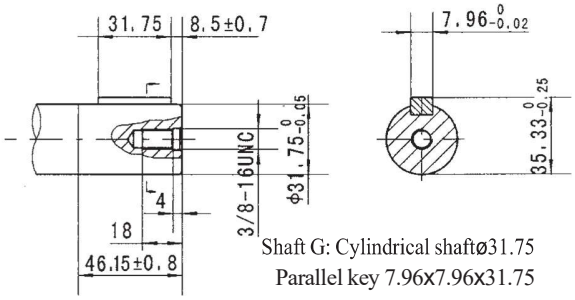


Shaft G: Cylindrical shaftø31.75
Parallel key 7.96x7.96x31.75

▷ MOTOR MOUNTING SURFACE

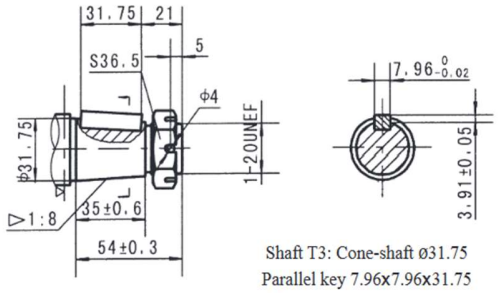


Shaft T3: Cone-shaft ø31.75
Parallel key 7.96x7.96x31.75
Tightening torque:200±10Nm

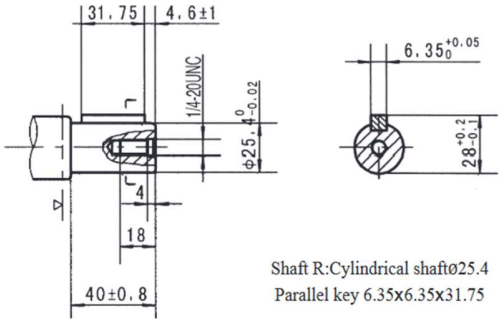


Shaft R:Cylindrical shaftø25.4
Parallel key 6.35x6.35x31.75

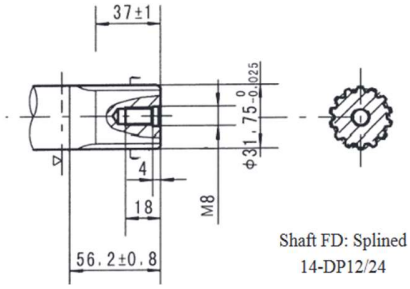


Shaft FD: Splined
14-DP12/24

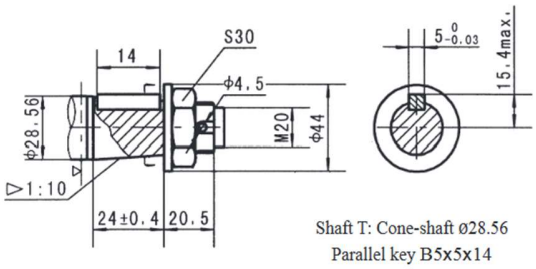


Shaft T: Cone-shaft ø28.56
Parallel key B5x5x14
Tightening torque:100±10Nm

▷ MOTOR MOUNTING SURFACE

# FPMPH SHAFT EXTENSIONS DIMENSIONS DATA

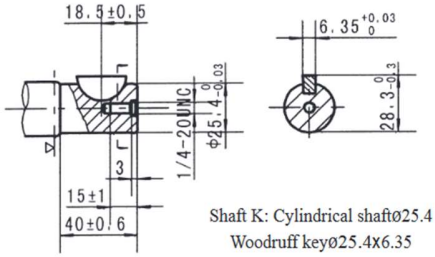


Shaft K: Cylindrical shaftø25.4
Woodruff keyø25.4x6.35

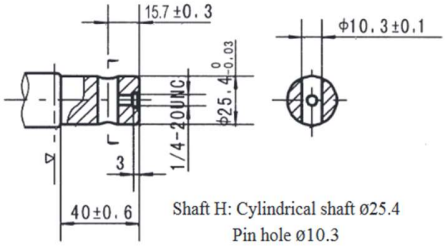


Shaft H: Cylindrical shaft ø25.4
Pin hole ø10.3

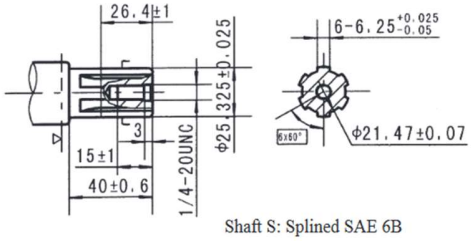


Shaft S: Splined SAE 6B

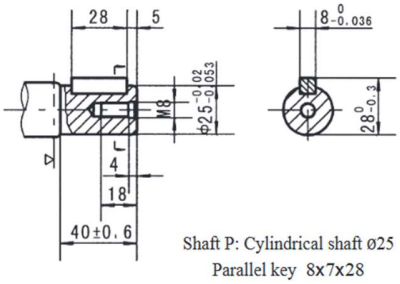


Shaft P: Cylindrical shaft ø25
Parallel key 8x7x28

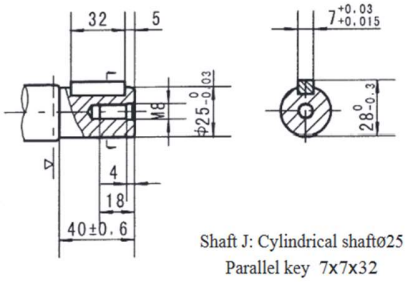


Shaft J: Cylindrical shaftø25
Parallel key 7x7x32

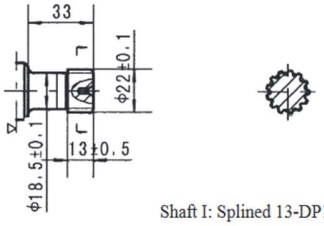


Shaft I: Splined 13-DP16/32

▷ MOTOR MOUNTING SURFACE

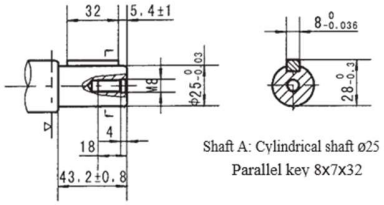


Shaft A: Cylindrical shaft ø25
Parallel key 8x7x32

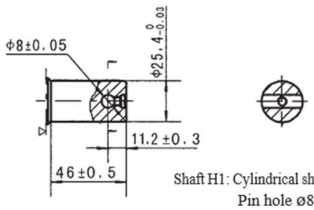


Shaft H1: Cylindrical shaft ø25.4
Pin hole ø8

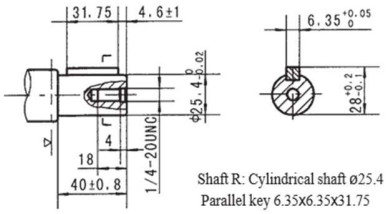


Shaft R: Cylindrical shaft ø25.4
Parallel key 6.35x6.35x31.75

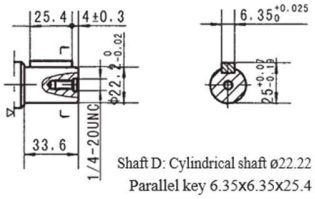


Shaft D: Cylindrical shaft ø22.22
Parallel key 6.35x6.35x25.4

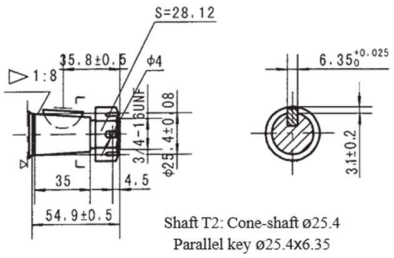


Shaft T2: Cone-shaft ø25.4
Parallel key ø25.4x6.35
Tightening torque:200±10Nm

▷ MOTOR MOUNTING SURFACE

## *FPMP, FPMPH Series Hydraulic Motor – Permissible shaft seal pressure*

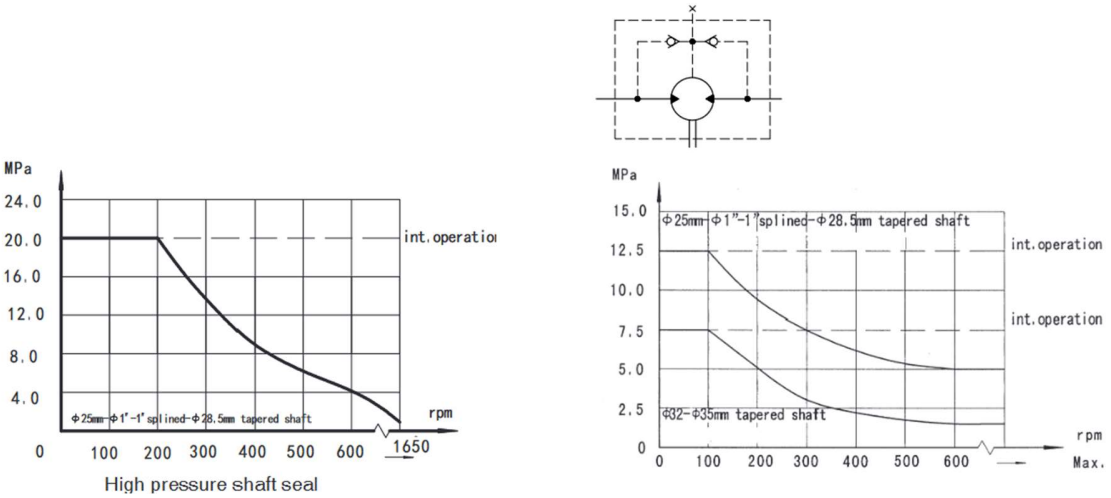


High pressure shaft seal

In applications without drain line, output shaft seal exceeds a bit of the pressure in the return line. When applications use the drain line, the pressure of output shaft seal equals the pressure in drain line.

## *Direction of shaft rotation: Standard*

When facing shaft end of motor, shaft to rotate:

- Clockwise when port "A" is pressurized.
- Counter-clockwise port "B" is pressurized.

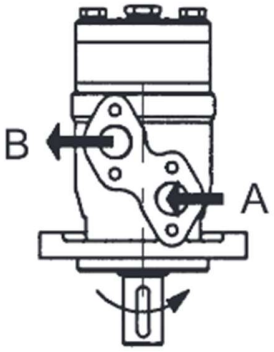


BMP

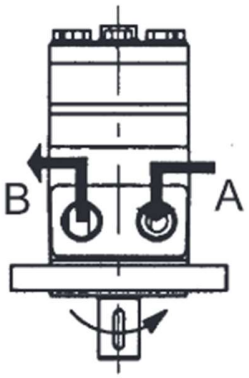


BMPH

## *Status of the shaft's seal radial force (Standard motor with journal bearing)*

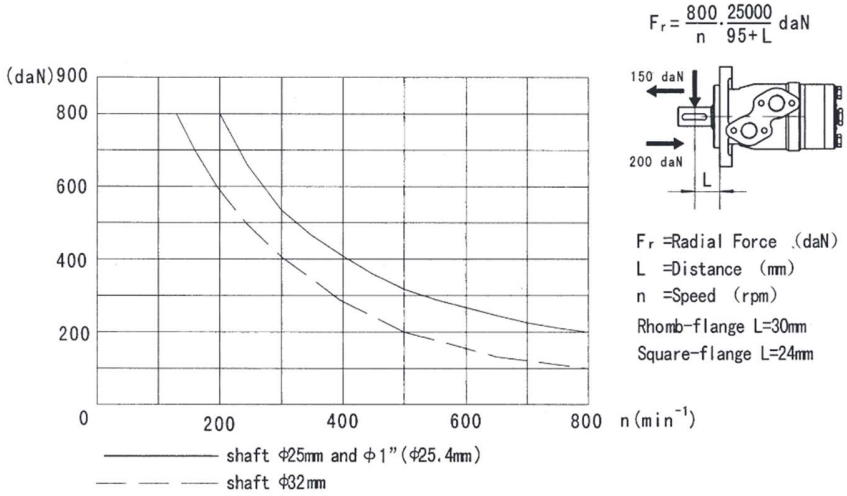


## *Oil flow in drain line*

The table shows the max. oil flow in the drain line at a return pressure less than 0.5-1MPa.

| *Pressure drop MPa* | *Viscosity (mm2/s)* | *Oil flow in the drain line (L/min.)* |
|---|---|---|
| 10 | 20 | 2.5 |
| | 35 | 1.8 |
| 14 | 20 | 3.5 |
| | 35 | 2.8 |

# Order Information

**FPMP** – 1 – 2 – 3 – 4 – 5 – 6 – 7 – 8

| Pos.1 | 2 | 3 | | 4 | | 5 | | 6 | | 7 | | 8 | |
|---|---|---|---|---|---|---|---|---|---|---|---|---|---|
| Code | Disp. | Flange | | Output Shaft | | Ports and Drain Port | | Rotation Direction | | Paint | | Unusually Function | |
| BMP | 36 | 2-Ø13.5 Rhomb-flange , pilot Ø82.5x8 | 2 | Shaft Ø25,parallel key 8x7x32 | A | G1/2 Manifold Mount 4xM8, G1/4 | D | Omit | 00 | No paint | Omit | Standard | Omit |
| | 50 | | | Shaft Ø25.4,parallel key 6.35x6.35x31.75 | C | M22×1.5 Manifold Mount 4xM8, M14x1.5 | M | R | Omit | Blue | N1 | Big radial force | N1 |
| | 80 | | | Shaft Ø25.4,splined tooth SEA 6B | E | 7/8-14 O-ring manifold 4x5/16-18UNC, 7/16-20UNF | S | | B | Black | 0 | No case drain | 0 |
| | 100 | 4-Ø13.5 Rhomb-flange , pilot Ø82.5x8 | 4 | Short shaft Ø25.4,parallel key6.35x6.35x31.75 | R | | | | S | Silver grey | F | Free Running | F |
| | 125 | | | Cone shaft Ø28.56,parallel key B5x5x14 | T | | | | | | LS | Low Speed | LS |
| | 160 | 4-3/8-16 Square-flange , pilot Ø44.4x2.8 | H4 | Shaft Ø32,parallel key 10x8x45 | B | 1/2-14 NPTF Manifold 4x5/16-18UNC, 7/16-20UNF | P | | | | | | |
| | 200 | | | Shaft Ø31.75,splined tooth 14-DP12/24 | F | | | | | | | | |
| | 250 | 4-M10 Square-flange , pilot Ø44.4x2.8 | H5 | Long shaft Ø31.75,splined tooth14-DP12/24 | FD | PT(Rc)1/2 Manifold 4xM8, PT(Rc)1/4 | R | | | | | | |
| | 315 | | | Shaft Ø31.75, parallel key 7.96x7.96x31.75 | G | | | | | | | | |
| | 400 | | | Cone shaft Ø31.75,parallel key 7.96x7.96x25.4 | T3 | | | | | | | | |
| | 500 | | | | | | | | | | | | |

Note:The shafts of B\F\FD\G\T1\T3 are only suitable for flanges of 2 and 4.

**FPMPH** – 1 – 2 – 3 – 4 – 5 – 6 – 7 – 8

| Pos.1 | 2 | 3 | | 4 | | 5 | | 6 | | 7 | | 8 | |
|---|---|---|---|---|---|---|---|---|---|---|---|---|---|
| Code | Disp. | Flange | | Output Shaft | | Ports and Drain Port | | Rotation Direction | | Paint | | Unusually Function | |
| BMPH | 36 | 2-Ø13.5 Rhomb-flange , pilot Ø82.5x2.8 | H2 | Shaft Ø25.4, woodruff key Ø25.4x6.35 | K | G1/2, G1/4 | G | Omit | 00 | No paint | Omit | Standard | Omit |
| | 50 | | | Shaft Ø25.4 , splined tooth SEA 6B | S | 7/8-14 O-ring ,7/16-20UNF | S | | Omit | Blue | N1 | Big radial force | N1 |
| | 80 | | | Shaft Ø25 , parallel key 8x7x32 | A | 1/2-14 NPTF, 7/16-20UNF | P | | B | Black | 0 | No case drain | 0 |
| | 100 | 4-Ø13.5 Rhomb-flange , pilot Ø82.5x2.8 | H6 | Shaft Ø25.4, parallel key 6.35x6.35x31.75 | R | 3/4-16 O-ring, 7/16-20UNF | T | | S | Silver grey | F | Free Running | F |
| | 125 | | | Shaft Ø25.4 , pin hole Ø10.3 | H | PT(Rc)1/2, PT(Rc)1/4 | R | | | | LS | Low Speed | LS |
| | 160 | 4-3/8-16 Square-flange , pilot Ø44.4x2.8 | H4 | Shaft Ø25.4 , pin hole Ø8 | H1 | Ø10 O-ring manifold 4x5/16-18UNC,7/16-20UNF | B4 | Omit | 00 | No paint | | | |
| | 200 | | | Shaft Ø22.22, parallel key 6.35x6.35x25.4 | D | | | R | Omit | Blue | | | |
| | 250 | 4-M10 Square-flange , pilot Ø44.4x2.8 | H5 | Shaft Ø22.22, splined tooth 13-DP16/32 | I | Ø10 O-ring manifold 4xM8, 7/16-20UNF | B5 | | B | Black | | | |
| | 315 | | | Cone shaft Ø25.4 , woodruff key Ø25.4x6.35 | T2 | | | | S | Silver grey | | | |
| | 400 | | | Shaft Ø25 , parallel key 8x7x28 | P | | | | | | | | |
| | 500 | | | Shaft Ø25 , parallel key 7x7x32 | J | | | | | | | | |

Note:When the table is used, please fill the code of left rows in dash area and give us, which the code information is consists of construction, displacement, mounting flange, output shaft and ports. If the specification is not in the table or you have specific requirements, please contact us.

# *FPMPW - Dimensions and Mounting Data*

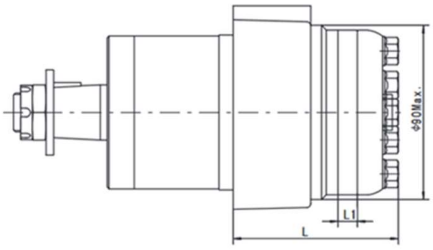


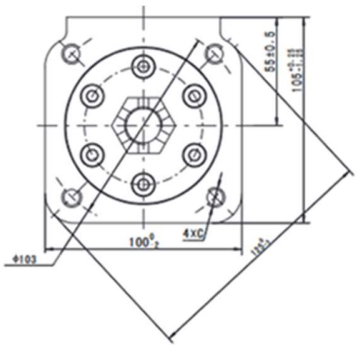


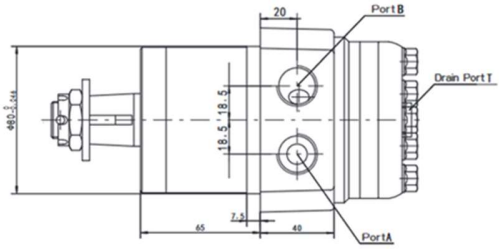


| Model | L | L1 |
|---|---|---|
| FPMPW 50 | 81 | 7 |
| FPMPW 80 | 84.5 | 10.5 |
| FPMPW100 | 87 | 13 |
| FPMPW125 | 90 | 16 |
| FPMPW160 | 95 | 21 |
| FPMPW200 | 100 | 26 |
| FPMPW250 | 106 | 32 |
| FPMPW315 | 116 | 42 |
| FPMPW400 | 126 | 52 |
| FPMPW500 | 139 | 65 |

| Code / Mounting | G (depth) | S (depth) | M (depth) |
|---|---|---|---|
| P(A,B) | G1/2 (15) | 7/8-14 O-ring (17) | M22×1.5 (15) |
| T | G1/4 (12) | 7/16-20UNF (12) | M14×1.5 (12) |
| C | 4×M10(20) | 4×3/8-16UNC(20) | 4×M10(20) |

## Order Information

FPMPW-[ ]-[ ]-[ ]-[ ]-[ ]-[ ]-[ ]-[ ]

| Pos.1 | 2 | 3 | | 4 | | 5 | | 6 | | 7 | | 8 | |
|---|---|---|---|---|---|---|---|---|---|---|---|---|---|
| Code | | Flange | | Output shaft | | Ports and drain port | | Rotation direction | | Paint | | Unusually function | |
| BMPW | 50 | Omit | Wheel-flange pilat Ø80x7.5 | A | Shaft Ø25k6 ,Parallel key 8x7x32 | G | G1/2, G1/4 | Omit | Standard | 00 | No paint | Omit | Standard |
| | 80 | | | C | Shaft Ø25.4 ,Parallel key 6.35x6.35x31.75 | S | 7/8-14 O-ring, | R | Opposite | Omit | Blue | N1 | Big radial force |
| | 100 | | | E | Shaft Ø25.4 ,Splined key SAE 6B | | 7/16-20UNF | | | B | Black | O | No case drain |
| | 125 | | | T | Cone shaft Ø28.56 ,Parallel key B5x5x14 | M | M22x1.5,M14x1.5 | | | S | Silver grey | | |
| | 160 | | | | | | | | | | | | |
| | 200 | | | | | | | | | | | | |
| | 250 | | | | | | | | | | | | |
| | 315 | | | | | | | | | | | | |
| | 400 | | | | | | | | | | | | |
| | 500 | | | | | | | | | | | | |

Note:When the table is used, please fill the code of left rows in the table and give us, which the code information is consists of construction, displacement, mounting flange, output shaft and ports. If the specification is not in the table or you have specific requirements, please contact us.

# OZ SERIES HYDRAULIC MOTOR

OZ series motor are small volume, economical type, which is designed with shaft distribution flow, which adapt the Gerotor gear set design and provide compact volume, high power and low weight.

**Characteristic features:**

- Advanced manufacturing devices for the Gerotor gear set, which provide small volume, high efficiency and long life.
- Shaft seal can bear high pressure of motor of which can be used in parallel or in series.
- Advanced construction design, high power and low weight.

## *Main Specification*

*Technical data for OZ with 25 and 1 in and 1 in splined and 28.56 tapered shaft*

| *Code* | *Displacement [cm³/rev]* | *Max. speed [rpm]* | *Max. torque [Nm]* | | *Max. output [kW]* | | *Max. pressure [MPa]* | | *Max. oil flow [L/min]* |
|---|---|---|---|---|---|---|---|---|---|
| | | cont. | cont. | int. | cont. | int. | cont. | int. | cont. |
| OZ 36 | 36 | 1081 | 51 | 68 | 5.2 | 8.6 | 10.5 | 14 | 40 |
| OZ 50 | 51.7 | 774 | 73 | 96 | 5.2 | 8.6 | 10.5 | 14 | 40 |
| OZ 80 | 77.7 | 515 | 106 | 143 | 5.2 | 8.6 | 10.5 | 14 | 40 |
| OZ 100 | 96.2 | 416 | 140 | 178 | 5.2 | 8.6 | 10.5 | 14 | 40 |
| OZ 125 | 120.2 | 339 | 162 | 218 | 5.2 | 8.6 | 10.5 | 14 | 40 |
| OZ 160 | 157.2 | 257 | 216 | 288 | 5.2 | 8.6 | 10.5 | 14 | 40 |
| OZ 200 | 194.5 | 211 | 264 | 351 | 5.2 | 8.6 | 10.5 | 14 | 40 |
| OZ 250 | 240.3 | 173 | 281 | 351 | 4.6 | 7 | 9 | 11.5 | 40 |
| OZ 315 | 314.5 | 128 | 312 | 433 | 3.4 | 5.8 | 7 | 10.5 | 40 |
| OZ 400 | 389.5 | 104 | 392 | 582 | 3.4 | 5.8 | 7 | 10.5 | 40 |

- Intermittent operation: the permissible values may occur for max.10% of every minute

## OZ - DIMENSIONS AND MOUNTING DATA

| Type | H | L |
|---|---|---|
| OZ36 | 7 | 101 |
| OZ50 | 7 | 101 |
| OZ80 | 10.5 | 104.5 |
| OZ100 | 13 | 107 |
| OZ125 | 16 | 110 |
| OZ160 | 21 | 115 |
| OZ200 | 26 | 120 |
| OZ250 | 32 | 126 |
| OZ315 | 42 | 136 |
| OZ400 | 52 | 146 |

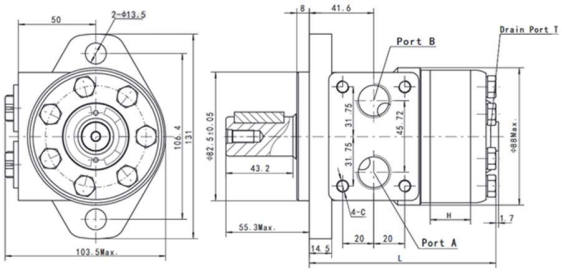


## OZ - Direction of shaft rotation: Standard

When facing shaft end of motor, shaft to rotate:

- Clockwise when port "A" is pressurized.
- Counter-clockwise when port "B" is pressurized.

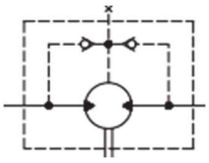

| Code Mounting | D (depth) | M (depth) | S (depth) | P (depth) | R (depth) |
|---|---|---|---|---|---|
| P(A,B) | G1/2 (15) | M22 x 1.5 (15) | 7/8-14 O-ring (16.7) | 1/2-14NPTF (15) | PT(RC)1/2 (15) |
| C | 4-M8 (13) | 4-M8(13) | 4-5/16-18UNC(13) | 4-5/16-18UNC(13) | 4-M8 (13) |
| T | G1/4 (12) | M14 x 1.5 (12) | 7/16-20UNF (12) | 7/16-20UNF (12) | PT(RC)1/4 (9.7) |

# OZ - SHAFT EXTENSIONS FOR OZ MOTORS

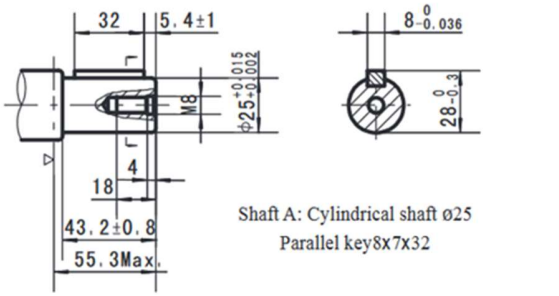


Shaft A: Cylindrical shaft ø25
Parallel key8x7x32

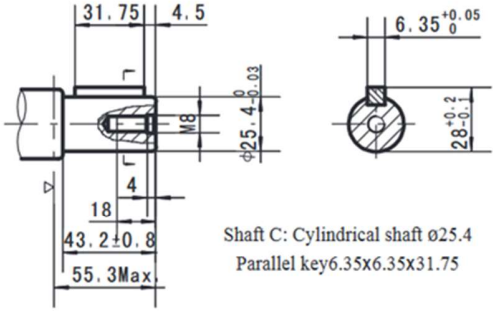


Shaft C: Cylindrical shaft ø25.4
Parallel key6.35x6.35x31.75

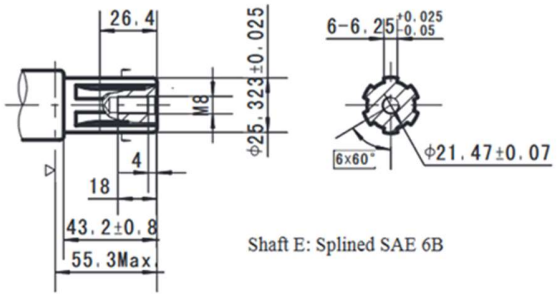


Shaft E: Splined SAE 6B

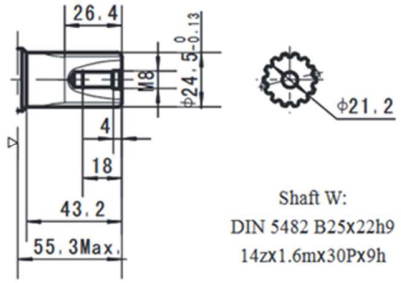


Shaft W:
DIN 5482 B25x22h9
14zx1.6mx30Px9h

▷ Motor Mounting Surface

## Order Information

FPOZ – 1 – 2 – 3 – 4 – 5 – 6 – 7 – 8

| Pos. | 1 | 2 | 3 | 4 | | 5 | | 6 | | 7 | | 8 |
|---|---|---|---|---|---|---|---|---|---|---|---|---|
| Code | | Disp. | Flange | Output Shaft | | Ports and Drain Port | | Rotation Direction | | Paint | | Unusually Function |
| | | 36 | | | | | | | | | | |
| | | 50 | | | | | | | | | | |
| | | 80 | | | | | | | | | | |
| | | 100 | | | | | | | | | | |
| | | 125 | | | | | | | | | | |
| | | 160 | | | | | | | | | | |
| | | 200 | | | | | | | | | | |
| | | 250 | | | | | | | | | | |
| | | 315 | | | | | | | | | | |
| | | 400 | | | | | | | | | | |
| Omit | | | 2-013.5 Rhomb-flange, pilot ø82.5x8 | A | Shaft ø25, parllel key 8x7x32 | D | G1/2 Manifold 4xM8, G1/4 | Omit | Standard | 00 | No paint | Omit | Standard |
| | | | | C | Shaft ø25.4, parllel key 6.35x6.35x31.75 | M | M22x1.5 Manifold4xM8,M14x1.5 | R | Opposite | Omit | Blue | F | Free Running |
| | | | | E | Shaft ø25.4, splined key SEA 6B | S | 7/8-14 O-ring manifold | | | B | Black | 0 | No case drain |
| | | | | W | Shaft ø24.5, splined B25X22 | P | 4x5/16-18UNC,7/16-20UNF 1/2-14NPTF manifold | | | S | Silver grey | | |
| | | | | T | Cone shaft ø28.56, parllel key B5x5x14 | R | 4x5/16-18UNC,7/16-20UNF PT(Rc)1/2 manifold 4xM8, PT(Rc)1/4 | | | | | | |

# FPMR SERIES HYDRAULIC MOTOR

FPMR series motor adapt the advanced Geroler gear set design with shaft distribution flow, which can automatically compensate in operating with high pressure, provide reliable and smooth operation, high efficiency and long life.

**Characteristic features:**

- Advanced manufacturing devices for the Geroler gear set, which use low pressure of start-up, provide smooth, reliable operation and high efficiency.
- Shaft seal can bear high pressure of back and the motor can be used in parallel or in series.
- Special design in the driver-linker and prolong operating life
- Special design for distribution system can meet the requirement of low noise of unit.
- Compact volume and easy installation

## *Main Specification*

*Technical data for FPMR with 25 and 1 in and 1 in splined and 28.56 tapered shaft*

| Type | | *FPMR FPMRS 36* | *FPMR FPMRS 50* | *FPMR FPMRS 80* | *FPMR FPMRS 100* | *FPMR FPMRS 125* | *FPMR FPMRS 160* | *FPMR FPMRS 200* | *FPMR FPMRS 250* | *FPMR FPMRS 315* | *FPMR FPMRS 375* |
|---|---|---|---|---|---|---|---|---|---|---|---|
| displacement ($cm^3$/rev) | | 36 | 51.7 | 81.5 | 102 | 127.2 | 157.2 | 194.5 | 253.3 | 317.5 | 381.4 |
| Max. speed (rpm) | cont. | 1085 | 960 | 750 | 600 | 475 | 378 | 310 | 240 | 190 | 155 |
| | int. | 1220 | 1150 | 940 | 750 | 600 | 475 | 385 | 300 | 240 | 190 |
| Max. torque (Nm) | cont. | 72 | 100 | 195 | 240 | 300 | 360 | 360 | 390 | 390 | 365 |
| | int. | 83 | 126 | 220 | 280 | 340 | 430 | 440 | 490 | 535 | 495 |
| | peak | 105 | 165 | 270 | 320 | 370 | 460 | 560 | 640 | 650 | 680 |
| Max. Output (kW) | cont. | 8.5 | 9.5 | 12.5 | 13.0 | 12.5 | 12.5 | 10.0 | 7.0 | 6.0 | 5.0 |
| | int. | 9.8 | 11.2 | 15.0 | 15.0 | 14.5 | 14.0 | 13.0 | 9.5 | 9.0 | 8.0 |
| Max. pressure Drop (MPa) | cont. | 14.0 | 14 | 17.5 | 17.5 | 17.5 | 16.5 | 13 | 11 | 9 | 7 |
| | int. | 16.5 | 17.5 | 20 | 20 | 20 | 20 | 17.5 | 15 | 13 | 10 |
| | peak | 22.5 | 22.5 | 22.5 | 22.5 | 22.5 | 22.5 | 22.5 | 20 | 17.5 | 15 |
| Max. flow (L/min) | cont. | 40 | 50 | 60 | 60 | 60 | 60 | 60 | 60 | 60 | 60 |
| | int. | 45 | 60 | 75 | 75 | 75 | 75 | 75 | 75 | 75 | 75 |
| Weight (kg) | | 6.5 | 6.7 | 6.9 | 7 | 7.3 | 7.6 | 8.0 | 8.5 | 9.0 | 9.5 |

- Continuous pressure: Max.value of operating motor continuously.
- Intermittent pressure: Max.value of operating motor in 6 seconds per minute.
- Peak pressure: Max.value of operating motor in 0.6 second per minute.

*Technical data for FPMR with 31.75 and 32 shaft*

| *Type* | | *FPMR 36* | *FPMR 50* | *FPMR 80* | *FPMR 100* | *FPMR 125* | *FPMR 160* | *FPMR 200* | *FPMR 250* | *FPMR 315* | *FPMR 375* |
|---|---|---|---|---|---|---|---|---|---|---|---|
| displacement (cm³/rev.) | | 36 | 51.7 | 81.5 | 102 | 127.2 | 157.2 | 194.5 | 253.3 | 317.5 | 381.4 |
| Max. speed (rpm) | cont. | 1250 | 960 | 750 | 600 | 475 | 378 | 310 | 240 | 190 | 155 |
| | int. | 1520 | 1150 | 940 | 750 | 600 | 475 | 385 | 300 | 240 | 190 |
| Max. torque (Nm) | cont. | 72 | 100 | 195 | 240 | 300 | 380 | 450 | 540 | 550 | 580 |
| | int. | 83 | 126 | 220 | 280 | 340 | 430 | 500 | 610 | 690 | 690 |
| | peak | 105 | 165 | 270 | 320 | 370 | 460 | 560 | 710 | 840 | 830 |
| Max. output (kW) | cont. | 8.5 | 9.5 | 12.5 | 13.0 | 12.5 | 12.5 | 11.0 | 10.0 | 9.0 | 7.5 |
| | int. | 9.8 | 11.2 | 15.0 | 15.0 | 14.5 | 14.0 | 13.0 | 12.0 | 10.0 | 9.0 |
| Max. pressure drop (MPa) | cont. | 14.0 | 14 | 17.5 | 17.5 | 17.5 | 17.5 | 17.5 | 17.5 | 13.5 | 11.5 |
| | int. | 16.5 | 17.5 | 20 | 20 | 20 | 20 | 20 | 20 | 17.5 | 15 |
| | peak | 22.5 | 22.5 | 22.5 | 22.5 | 22.5 | 22.5 | 22.5 | 22.5 | 21 | 17.5 |
| Max. flow (L/min) | cont. | 45 | 50 | 60 | 60 | 60 | 60 | 60 | 60 | 60 | 60 |
| | int. | 55 | 60 | 75 | 75 | 75 | 75 | 75 | 75 | 75 | 75 |
| Weight (kg) | | 6.5 | 6.7 | 6.9 | 7 | 7.3 | 7.6 | 8.0 | 8.5 | 9.0 | 9.5 |

- Continuous pressure: Max. value of operating motor continuously.
- Intermittent pressure: Max. value of operating motor in 6 seconds per minute.
- Peak pressure: Max. value of operating motor in 0.6 second per minute.

FLUIDPARTS HYDRO-MOTORS

# *Performance Data*

## FPMR 36 [36 cm³/rev]

| Flow (L/min) | Pressure (MPa) 2 | 3 | 5 | 7 | 9 | 10 | 12.5 | 14.0 Max.cont. | 16.5 Max.int. |
|---|---|---|---|---|---|---|---|---|---|
| 4 | 10 | 16 | 25 | 37 | 46 | 50 | | | |
| | **105** | **100** | **92** | **80** | **71** | **58** | | | |
| 8 | 9 | 15 | 25 | 37 | 47 | 50 | 63 | 71 | 83 |
| | **208** | **200** | **188** | **175** | **158** | **149** | **134** | **120** | **108** |
| 15 | 8 | 14 | 23 | 36 | 45 | 51 | 64 | 72 | 82 |
| | **403** | **392** | **380** | **365** | **348** | **326** | **318** | **302** | **274** |
| 20 | 6 | 13 | 22 | 35 | 44 | 50 | 64 | 72 | 82 |
| | **540** | **531** | **518** | **500** | **483** | **462** | **450** | **435** | **412** |
| 30 | 6 | 12 | 21 | 32 | 42 | 47 | 63 | 70 | 80 |
| | **810** | **798** | **780** | **763** | **742** | **722** | **705** | **694** | **668** |
| 40 Max.cont. | 5 | 11 | 19 | 30 | 41 | 45 | 61 | 68 | 79 |
| | **1092** | **1080** | **1069** | **1056** | **1042** | **1028** | **1011** | **984** | **957** |
| 45 Max.int. | 4 | 10 | 17 | 29 | 40 | 44 | 59 | 66 | 77 |
| | **1230** | **1215** | **1194** | **1170** | **1150** | **1128** | **1100** | **1070** | **1020** |

## FPMP 50 [51.7 cm³/rev]

| Flow (L/min) | Pressure (MPa) 5 | 7 | 9 | 10 | 12 | 14 Max.cont. | 16 | 17.5 Max.int. |
|---|---|---|---|---|---|---|---|---|
| 5 | 35 | 45 | 61 | 67 | 77 | 88 | | |
| | **93** | **84** | **76** | **73** | **69** | **46** | | |
| 10 | 36 | 46 | 62 | 69 | 80 | 95 | 108 | 120 |
| | **186** | **178** | **166** | **162** | **153** | **136** | **118** | **97** |
| 15 | 35 | 49 | 63 | 73 | 88 | 100 | 109 | 123 |
| | **283** | **277** | **269** | **261** | **250** | **230** | **211** | **185** |
| 20 | 34.5 | 47 | 61 | 69 | 83 | 96 | 109 | 126 |
| | **377** | **375** | **365** | **361** | **346** | **330** | **302** | **270** |
| 30 | 33 | 44 | 60 | 67 | 80 | 95 | 108 | 126 |
| | **576** | **569** | **561** | **554** | **542** | **531** | **500** | **465** |
| 40 | 30 | 41 | 58 | 66 | 79 | 92 | 106 | 122 |
| | **760** | **758** | **753** | **750** | **738** | **724** | **700** | **670** |
| 45 | 29.5 | 40 | 57 | 65 | 78 | 90 | 105 | 121 |
| | **856** | **853** | **849** | **845** | **835** | **815** | **796** | **770** |
| 50 Max.cont. | 26 | 37 | 53 | 60 | 73 | 85 | 99 | 114 |
| | **950** | **940** | **925** | **906** | **880** | **852** | **832** | **801** |
| 60 Max.int. | 20 | 33 | 48 | 56 | 69 | 81 | 95 | 109 |
| | **1138** | **1124** | **1100** | **1075** | **1056** | **1028** | **1006** | **970** |

## FPMR 80 [81.5 cm³/rev]

| Flow (L/min) | Pressure (MPa) 5 | 7 | 9 | 10 | 12 | 14 | 16 Max.cont. | 17.5 | 20 Max.int. |
|---|---|---|---|---|---|---|---|---|---|
| 5 | 50 | 64 | 88 | 108 | 133 | | | | |
| | **59** | **56** | **50** | **44** | **38** | | | | |
| 10 | 54 | 77 | 99 | 108 | 129 | 150 | 173 | | |
| | **118** | **113** | **106** | **97** | **86** | **79** | **56** | | |
| 20 | 57 | 78.0 | 102 | 111 | 134 | 155 | 177 | 196 | 225 |
| | **238** | **234** | **227** | **216** | **203** | **190** | **178** | **154** | **135** |
| 30 | 54 | 75 | 100 | 108 | 131 | 152 | 176 | 195 | 223 |
| | **360** | **352** | **340** | **332** | **316** | **302** | **290** | **274** | **250** |
| 40 | 48 | 73 | 96 | 105 | 127 | 148 | 172 | 190 | 220 |
| | **480** | **470** | **458** | **445** | **430** | **418** | **403** | **388** | **359** |
| 50 | 42 | 70 | 93 | 102 | 124 | 147 | 170 | 188 | 218 |
| | **604** | **595** | **582** | **570** | **556** | **540** | **521** | **504** | **487** |
| 60 Max.cont. | 37 | 66 | 89 | 98 | 121 | 144 | 166 | 184 | 213 |
| | **726** | **715** | **704** | **692** | **678** | **663** | **647** | **622** | **594** |
| 70 | 32 | 60 | 83 | 95 | 116 | 140 | 160 | 177 | 208 |
| | **845** | **834** | **820** | **802** | **789** | **767** | **754** | **730** | **705** |
| 75 Max.int. | 21 | 50 | 78 | 90 | 111 | 135 | 154 | 171 | 200 |
| | **910** | **895** | **881** | **867** | **852** | **830** | **806** | **787** | **756** |

Torque (N•m) 135
Speed (rpm) **830**

## FPMR 100 [102 cm³/rev]

| Flow (L/min) | Pressure (MPa) 5 | 7 | 9 | 10 | 12 | 14 | 16 Max.cont. | 17.5 | 20 Max.int. |
|---|---|---|---|---|---|---|---|---|---|
| 5 | 66 | 92 | 120 | 135 | 156 | | | | |
| | **45** | **42** | **38** | **34** | **27** | | | | |
| 10 | 68 | 96 | 125 | 138 | 159 | 188 | 212 | | |
| | **93** | **90** | **86** | **81** | **74** | **57** | **42** | | |
| 20 | 65 | 94.0 | 123 | 137 | 155 | 186 | 210 | 238 | 274 |
| | **189** | **185** | **180** | **173** | **165** | **158** | **150** | **139** | **118** |
| 30 | 63 | 92 | 120 | 133 | 153 | 185 | 209 | 235 | 270 |
| | **286** | **281** | **275** | **266** | **257** | **246** | **237** | **225** | **207** |
| 40 | 57 | 88 | 117 | 130 | 152 | 185 | 208 | 233 | 267 |
| | **385** | **378** | **365** | **355** | **345** | **332** | **320** | **314** | **297** |
| 50 | 48 | 79 | 110 | 123 | 150 | 183 | 204 | 228 | 260 |
| | **482** | **477** | **470** | **460** | **448** | **435** | **420** | **405** | **389** |
| 60 Max.cont. | 38 | 70 | 105 | 120 | 144 | 178 | 200 | 220 | 252 |
| | **580** | **572** | **560** | **548** | **535** | **523** | **510** | **500** | **478** |
| 70 | 32 | 65 | 100 | 118 | 141 | 176 | 197 | 215 | 246 |
| | **678** | **670** | **660** | **648** | **638** | **626** | **615** | **606** | **580** |
| 75 Max.int. | 23 | 59 | 93 | 111 | 136 | 170 | 192 | 210 | 240 |
| | **728** | **720** | **710** | **695** | **681** | **667** | **650** | **634** | **618** |

cont.
int.

FLUIDPARTS HYDRO-MOTORS

## FPMR 125 [127.2 cm³/rev]

| Flow (L/min) | Pressure (MPa) 5 | 7 | 9 | 10 | 12 | 14 | 16 | 17.5 | 20 |
|---|---|---|---|---|---|---|---|---|---|
| 5 | 76 | 110 | 145 | 167 | 189 | | | | |
| | **36** | **31** | **25** | **19** | **13** | | | | |
| 10 | 84 | 118 | 155 | 176 | 202 | 228 | 253 | | |
| | **73** | **70** | **60** | **48** | **36** | **25** | **19** | | |
| 20 | 82 | 117 | 153 | 174 | 200 | 230 | 259 | 294 | 332 |
| | **153** | **151** | **148** | **144** | **138** | **128** | **117** | **104** | **73** |
| 30 | 79 | 116 | 151 | 171 | 198 | 228 | 257 | 292 | 329 |
| | **231** | **228** | **224** | **218** | **210** | **201** | **183** | **168** | **137** |
| 40 | 72 | 114 | 148 | 168 | 196 | 226 | 256 | 290 | 327 |
| | **309** | **307** | **303** | **298** | **292** | **280** | **270** | **252** | **218** |
| 50 | 62 | 105 | 143 | 165 | 195 | 223 | 254 | 287 | 323 |
| | **389** | **386** | **382** | **378** | **370** | **360** | **344** | **328** | **292** |
| Max.cont. 60 | 52 | 98 | 136 | 160 | 191 | 220 | 250 | 282 | 319 |
| | **467** | **463** | **459** | **456** | **448** | **427** | **410** | **399** | **352** |
| 70 | 41 | 90 | 130 | 156 | 187 | 215 | 242 | 278 | 313 |
| | **545** | **542** | **538** | **534** | **529** | **520** | **508** | **486** | **430** |
| Max.int. 75 | 32 | 79 | 126 | 148 | 180 | 208 | 234 | 262 | 300 |
| | **586** | **583** | **578** | **570** | **560** | **546** | **532** | **520** | **480** |

## FPMR 160 [157.2 cm³/rev]

| Flow (L/min) | Pressure (MPa) 5 | 7 | 9 | 10 | 12 | 14 | 16 | 17.5 | 20 |
|---|---|---|---|---|---|---|---|---|---|
| 5 | 104 | 146 | 190 | 210 | 245 | | | | |
| | **26** | **23** | **20** | **16** | **10** | | | | |
| 10 | 107 | 150 | 195 | 216 | 250 | 290 | 335 | | |
| | **59** | **56** | **50** | **45** | **37** | **30** | **22** | | |
| 20 | 102 | 151 | 198 | 220 | 257 | 298 | 342 | 370 | 420 |
| | **121** | **118** | **115** | **113** | **108** | **102** | **97** | **90** | **78** |
| 30 | 97 | 146 | 190 | 217 | 256 | 295 | 340 | 368 | 416 |
| | **184** | **178** | **173** | **170** | **164** | **155** | **143** | **128** | **103** |
| 40 | 89 | 140 | 185 | 210 | 252 | 290 | 335 | 363 | 412 |
| | **246** | **241** | **235** | **228** | **220** | **210** | **194** | **177** | **150** |
| 50 | 72 | 128 | 179 | 202 | 244 | 284 | 327 | 358 | 409 |
| | **310** | **307** | **300** | **295** | **287** | **278** | **262** | **247** | **210** |
| Max.cont. 60 | 60 | 116 | 170 | 198 | 240 | 279 | 321 | 352 | 400 |
| | **374** | **367** | **359** | **354** | **346** | **338** | **323** | **306** | **265** |
| 70 | 49 | 107 | 164 | 193 | 233 | 271 | 309 | 344 | 390 |
| | **437** | **430** | **421** | **415** | **403** | **393** | **381** | **365** | **318** |
| Max.int. 75 | 36 | 98 | 152 | 185 | 226 | 265 | 300 | 334 | 379 |
| | **472** | **463** | **450** | **441** | **431** | **420** | **405** | **389** | **365** |

## FPMR 200 [194.5 cm³/rev]

| Flow (L/min) | Pressure (MPa) 5 | 7 | 9 | 10 | 12 | 14 | 16 | 17.5 | 20 |
|---|---|---|---|---|---|---|---|---|---|
| 5 | 132 | 181 | 238 | 262 | 310 | | | | |
| | **24** | **22** | **18** | **13** | **10** | | | | |
| 10 | 135 | 186 | 240 | 264 | 315 | 356 | 403 | | |
| | **49** | **47** | **45** | **43** | **38** | **33** | **24** | | |
| 20 | 131 | 183 | 238 | 260 | 314 | 358 | 404 | 438 | 498 |
| | **99** | **97** | **94** | **92** | **88** | **83** | **74** | **64** | **56** |
| 30 | 126 | 178 | 233 | 254 | 311 | 355 | 402 | 431 | 486 |
| | **149** | **147** | **144** | **141** | **135** | **126** | **113** | **105** | **91** |
| 40 | 112 | 169 | 228 | 250 | 307 | 352 | 400 | 426 | 477 |
| | **200** | **197** | **194** | **191** | **185** | **174** | **160** | **151** | **127** |
| 50 | 95 | 156 | 221 | 246 | 300 | 350 | 398 | 421 | 470 |
| | **252** | **249** | **246** | **243** | **238** | **228** | **212** | **194** | **161** |
| Max.cont. 60 | 78 | 145 | 213 | 238 | 289 | 342 | 386 | 412 | 459 |
| | **304** | **301** | **298** | **294** | **286** | **276** | **262** | **243** | **218** |
| 70 | 67 | 135 | 206 | 228 | 277 | 336 | 375 | 408 | 453 |
| | **355** | **353** | **349** | **340** | **329** | **316** | **300** | **288** | **257** |
| Max.int. 75 | 58 | 125 | 197 | 220 | 270 | 321 | 360 | 398 | 442 |
| | **382** | **379** | **373** | **362** | **350** | **337** | **322** | **312** | **278** |

cont.
int.

## FPMR 250 [253.5 cm³/rev]

| Flow (L/min) | Pressure (MPa) 5 | 7 | 9 | 10 | 12 | 14 | 16 | 17.5 | 20 |
|---|---|---|---|---|---|---|---|---|---|
| 5 | 175 | 243 | 304 | 342 | 407 | | | | |
| | **17** | **16** | **14** | **12** | **10** | | | | |
| 10 | 178 | 246 | 310 | 344 | 409 | 465 | 525 | | |
| | **37** | **35** | **31** | **28** | **23** | **18** | **11** | | |
| 20 | 175 | 244 | 308 | 340 | 408 | 463 | 520 | 558 | 636 |
| | **75** | **73** | **72** | **70** | **66** | **58** | **53** | **50** | **42** |
| 30 | 162 | 235 | 304 | 332 | 400 | 455 | 516 | 550 | 621 |
| | **114** | **111** | **108** | **106** | **100** | **92** | **83** | **77** | **65** |
| 40 | 143 | 223 | 300 | 329 | 396 | 447 | 512 | 546 | 617 |
| | **154** | **152** | **150** | **147** | **143** | **132** | **120** | **110** | **90** |
| 50 | 124 | 208 | 289 | 323 | 384 | 440 | 503 | 535 | 600 |
| | **193** | **190** | **187** | **174** | **168** | **160** | **149** | **140** | **116** |
| Max.cont. 60 | 103 | 192 | 280 | 314 | 371 | 426 | 489 | 514 | 578 |
| | **233** | **230** | **227** | **224** | **218** | **205** | **190** | **181** | **155** |
| 70 | 88 | 178 | 264 | 301 | 356 | 418 | 479 | 498 | 560 |
| | **273** | **270** | **267** | **263** | **252** | **242** | **226** | **209** | **173** |
| Max.int. 75 | 62 | 165 | 256 | 288 | 347 | 412 | 474 | 486 | 542 |
| | **294** | **291** | **287** | **283** | **274** | **263** | **249** | **236** | **211** |

Torque (N•m) 256
Speed (rpm) **287**

## FPMR 315 [317.5 cm³/rev]

| Flow (L/min) | Pressure (MPa) 5 | 7 | 9 | 10 | 12 | 14 (Max.cont.) | 16 | 17.5 (Max.int.) |
|---|---|---|---|---|---|---|---|---|
| 5 | 215 **13** | 302 **11** | | | | | | |
| 10 | 218 **28** | 305 **27** | 383 **25** | 422 **24** | 488 **21** | 551 **18** | 622 **13** | |
| 20 | 215 **60** | 303 **59** | 380 **57** | 418 **55** | 485 **52** | 549 **49** | 620 **45** | 660 **42** |
| 30 | 204 **91** | 296 **89** | 375 **86** | 413 **84** | 480 **81** | 542 **78** | 613 **72** | 654 **67** |
| 40 | 196 **122** | 287 **120** | 368 **117** | 410 **112** | 477 **106** | 539 **100** | 609 **94** | 650 **85** |
| 50 | 176 **154** | 270 **151** | 356 **147** | 393 **140** | 461 **131** | 526 **120** | 597 **109** | 645 **100** |
| Max.cont. 60 | 162 **185** | 246 **182** | 339 **177** | 374 **172** | 446 **163** | 511 **152** | 586 **140** | 628 **134** |
| 70 | 143 **217** | 235 **213** | 324 **208** | 358 **201** | 430 **190** | 493 **178** | 562 **166** | 614 **158** |
| Max.int. 75 | 125 **232** | 212 **228** | 303 **222** | 339 **216** | 417 **208** | 481 **200** | 543 **183** | 582 **171** |

Torque (N•m) 481
Speed (rpm) **200**

## FPMR 375 [381.4 cm³/rev]

| Flow (L/min) | Pressure (MPa) 3 | 4.5 | 5.5 | 6.5 | 8 | 10 (Max.cont.) | 12.5 | 14 (Max.int.) |
|---|---|---|---|---|---|---|---|---|
| 5 | 153 **12** | 232 **10** | | | | | | |
| 10 | 157 **24** | 236 **23** | 284 **22** | 337 **21** | 406 **19** | 497 **17** | 612 **15** | 668 **12** |
| 20 | 150 **49** | 232 **48** | 280 **47** | 332 **46** | 401 **44** | 490 **41** | 606 **38** | 660 **32** |
| 30 | 142 **76** | 215 **75** | 274 **74** | 327 **73** | 398 **71** | 483 **67** | 603 **63** | 652 **50** |
| 40 | 126 **103** | 212 **101** | 268 **99** | 320 **97** | 393 **95** | 477 **92** | 593 **88** | 635 **70** |
| 50 | 105 **128** | 187 **126** | 242 **124** | 302 **121** | 376 **118** | 455 **115** | 583 **111** | 608 **96** |
| Max.cont. 60 | 90 **154** | 167 **152** | 229 **150** | 281 **148** | 362 **145** | 444 **138** | 566 **130** | 600 **121** |
| 70 | 90 **180** | 149 **179** | 200 **178** | 258 **176** | 341 **173** | 425 **168** | 546 **160** | 580 **148** |
| Max.int. 75 | 56 **195** | 125 **194** | 182 **193** | 241 **191** | 320 **189** | 408 **185** | 524 **178** | 565 **170** |

cont.
int.

# FPMR - DIMENSION AND MOUNTING DATA

## MOUNTING

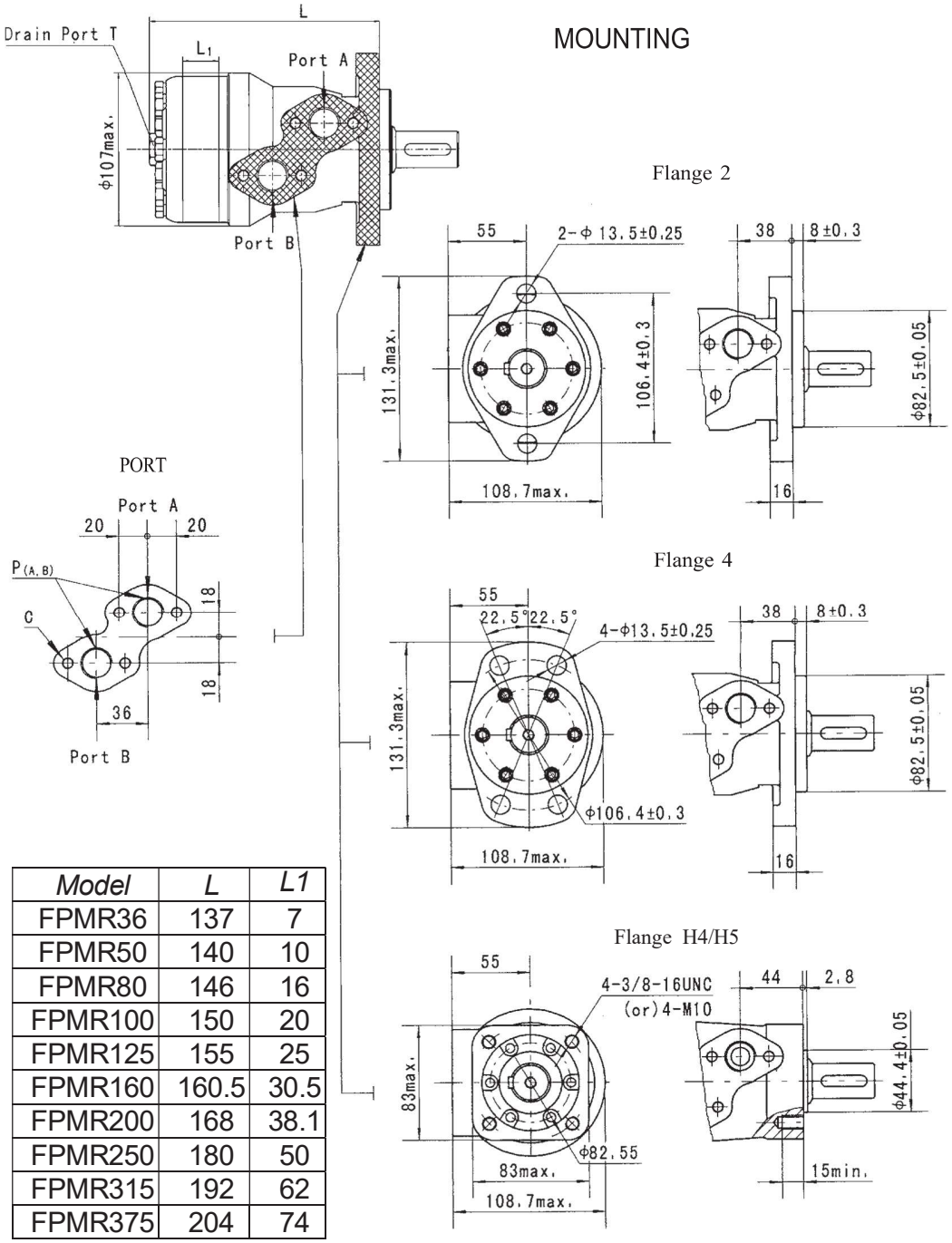


| Model | L | L1 |
|---|---|---|
| FPMR36 | 137 | 7 |
| FPMR50 | 140 | 10 |
| FPMR80 | 146 | 16 |
| FPMR100 | 150 | 20 |
| FPMR125 | 155 | 25 |
| FPMR160 | 160.5 | 30.5 |
| FPMR200 | 168 | 38.1 |
| FPMR250 | 180 | 50 |
| FPMR315 | 192 | 62 |
| FPMR375 | 204 | 74 |

| *Code Mounting* | *D (depth)* | *M (depth)* | *S (depth)* | *P (depth)* | *R (depth)* |
|---|---|---|---|---|---|
| P(A,B) | G1/2 (15) | M22 x 1.5 (15) | 7/8-14 O-ring (17) | 1/2-14NPTF (15) | PT(RC)1/2 (15) |
| C | 4-M8 (13) | 4-M8 (13) | 4-5/16-18UNC(13) | 4-5/16-18UNC(13) | 4-M8 (13) |
| T | G1/4 (12) | M14 x 1.5 (12) | 7/16-20UNF (12) | 7/16-20UNF (12) | PT(RC)1/4 (9.7) |

# FPMRS - DIMENSIONS AND MOUNTING DATA

## MOUNTING

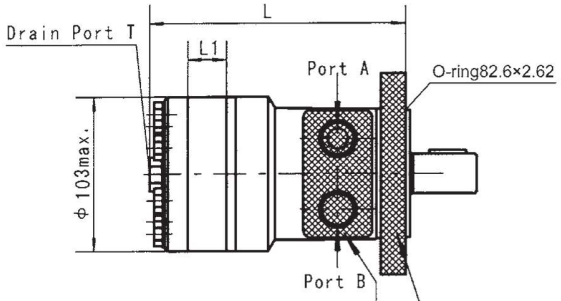


PORT: G、 S、 P、 R、 M1、 M2、 M3

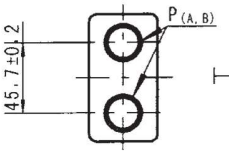


PORT: B4、 B5

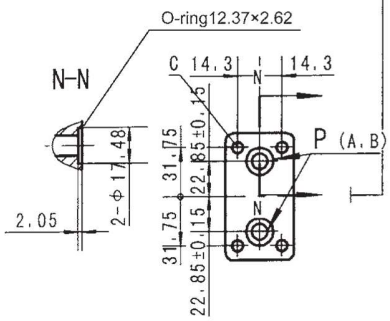


| Model | L | L1 |
|---|---|---|
| FPMRS36 | 143 | 7 |
| FPMRS50 | 146 | 10 |
| FPMRS80 | 152 | 16 |
| FPMRS100 | 156 | 20 |
| FPMRS125 | 161 | 25 |
| FPMRS160 | 166.5 | 30.5 |
| FPMRS200 | 174 | 38.1 |
| FPMRS250 | 186 | 50 |
| FPMRS315 | 198 | 62 |
| FPMRS375 | 210 | 74 |

Flange H2

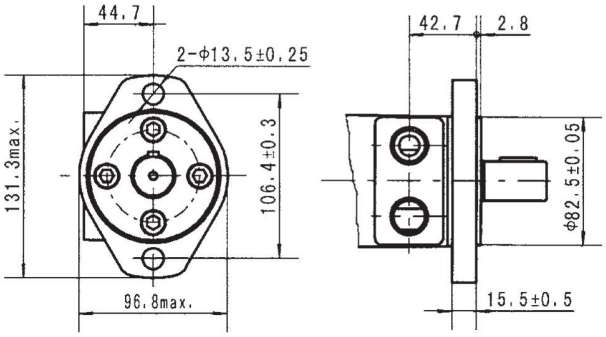


Flange H6

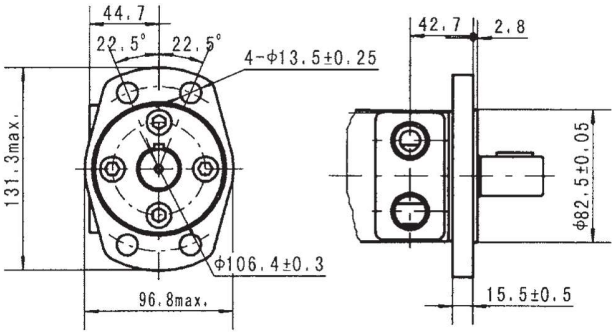


Flange H4/H5

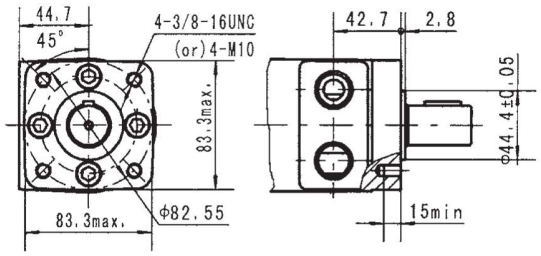

| *Code Mounting* | *G (depth)* | *S (depth)* | *P (depth)* | *R (depth)* | *M1 (depth)* | *M2 (depth)* | *M3 (depth)* | *B4 (depth)* | *B5 (depth)* |
|---|---|---|---|---|---|---|---|---|---|
| P(A,B) | G1/2 (15) | 7/8-14 O-ring (17) | 1/2-14NPT F (15) | PT(RC) 1/2 (15) | M18 x 1.5 (15) | M20 x 1.5 (15) | M22 x 1.5 (15) | ø10 | ø10 |
| T | G1/4 (12) | 7/16-20UNF (12) | 7/16-20UNF (12) | PT(RC) 1/4 (9.7) | M10 x 1 (12) | M10 x 1 (12) | M10 x 1 (12) | 7/16-20UNF( 12) | G1/4(12) |
| C | – | – | – | – | – | – | – | 4-5/16-18UNC (13) | 4-M8(13) |

# FPMR - SHAFT EXTENSIONS DIMENSION DATA

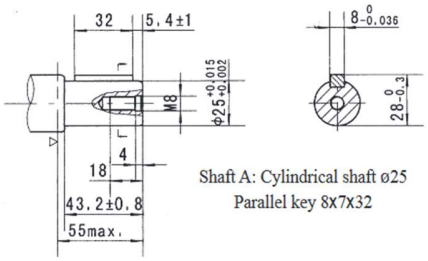


Shaft A: Cylindrical shaft ø25
Parallel key 8x7x32

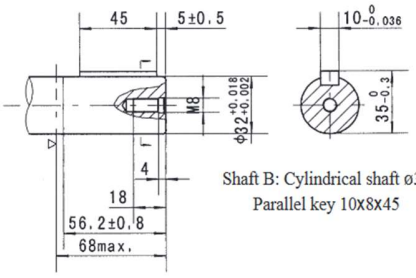


Shaft B: Cylindrical shaft ø32
Parallel key 10x8x45

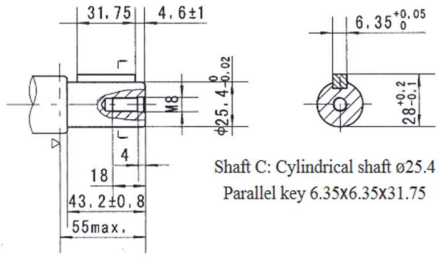


Shaft C: Cylindrical shaft ø25.4
Parallel key 6.35x6.35x31.75

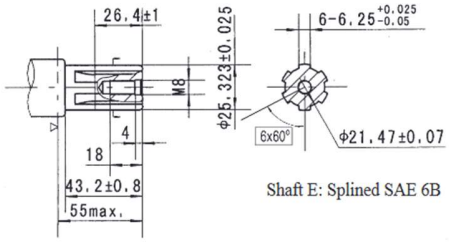


Shaft E: Splined SAE 6B

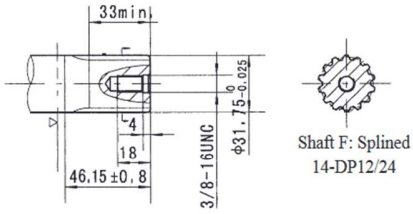


Shaft F: Splined
14-DP12/24

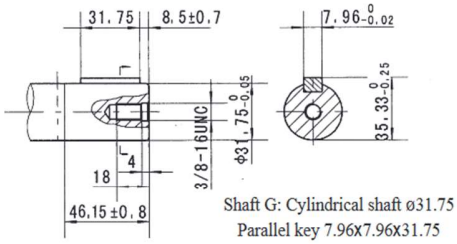


Shaft G: Cylindrical shaft ø31.75
Parallel key 7.96x7.96x31.75

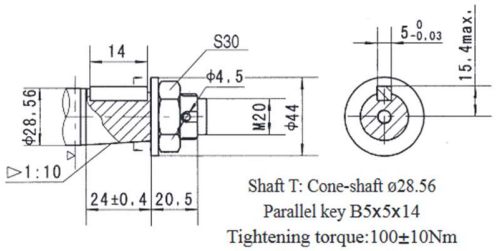


Shaft T: Cone-shaft ø28.56
Parallel key B5x5x14
Tightening torque:100±10Nm

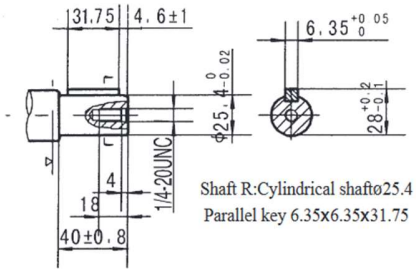


Shaft R:Cylindrical shaftø25.4
Parallel key 6.35x6.35x31.75

▷ MOTOR MOUNTING SURFACE

# FPMRS- SHAFT EXTENSIIONS DIMENSIONS DATA

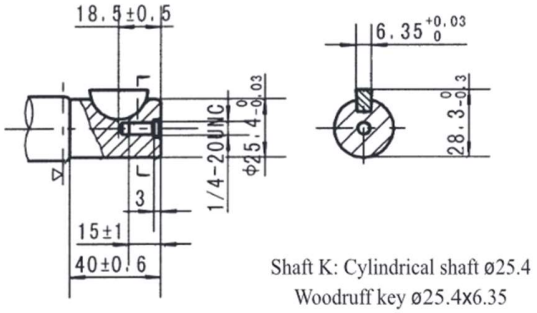


Shaft K: Cylindrical shaft ø25.4
Woodruff key ø25.4x6.35

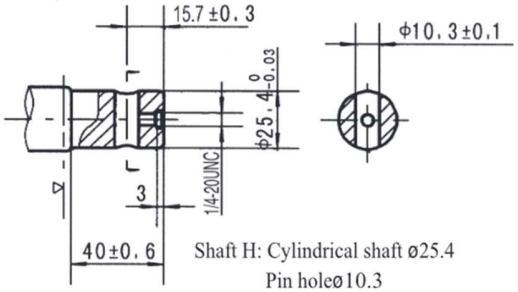


Shaft H: Cylindrical shaft ø25.4
Pin hole ø10.3

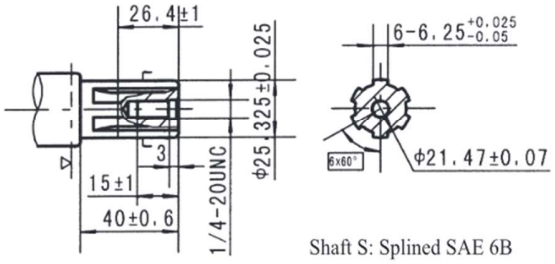


Shaft S: Splined SAE 6B

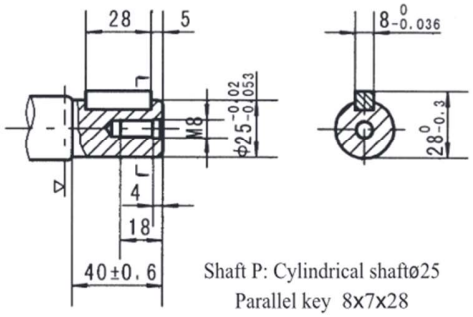


Shaft P: Cylindrical shaft ø25
Parallel key 8x7x28

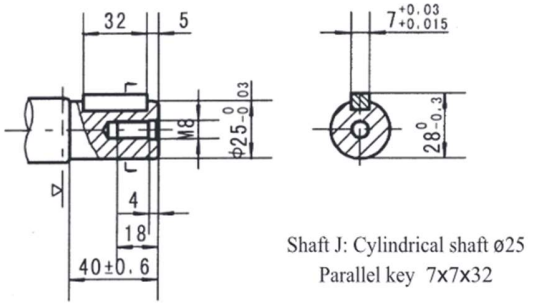


Shaft J: Cylindrical shaft ø25
Parallel key 7x7x32

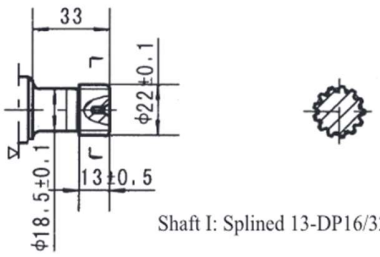


Shaft I: Splined 13-DP16/32

▷ MOTOR MOUNTING SURFACE

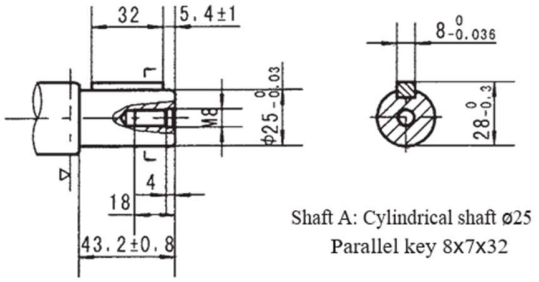


Shaft A: Cylindrical shaft ø25
Parallel key 8x7x32

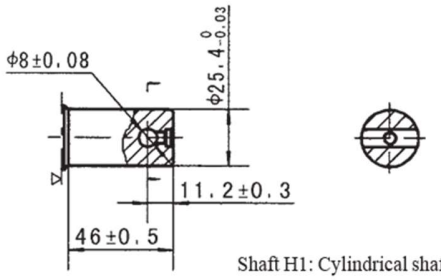


Shaft H1: Cylindrical shaft ø25.4
Pin hole ø8

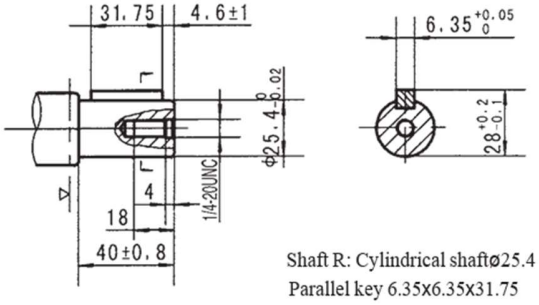


Shaft R: Cylindrical shaftø25.4
Parallel key 6.35x6.35x31.75

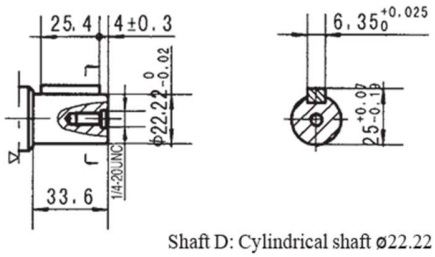


Shaft D: Cylindrical shaft ø22.22
Parallel key 6.35x6.35x25.4

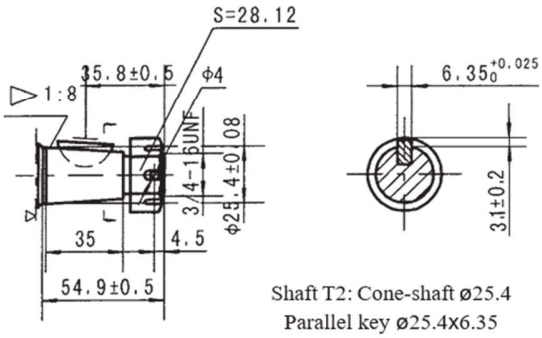


Shaft T2: Cone-shaft ø25.4
Parallel key ø25.4x6.35
Tightening torque:200±10Nm

▷ MOTOR MOUNTING SURFACE

## *Permissible shaft seal pressure*

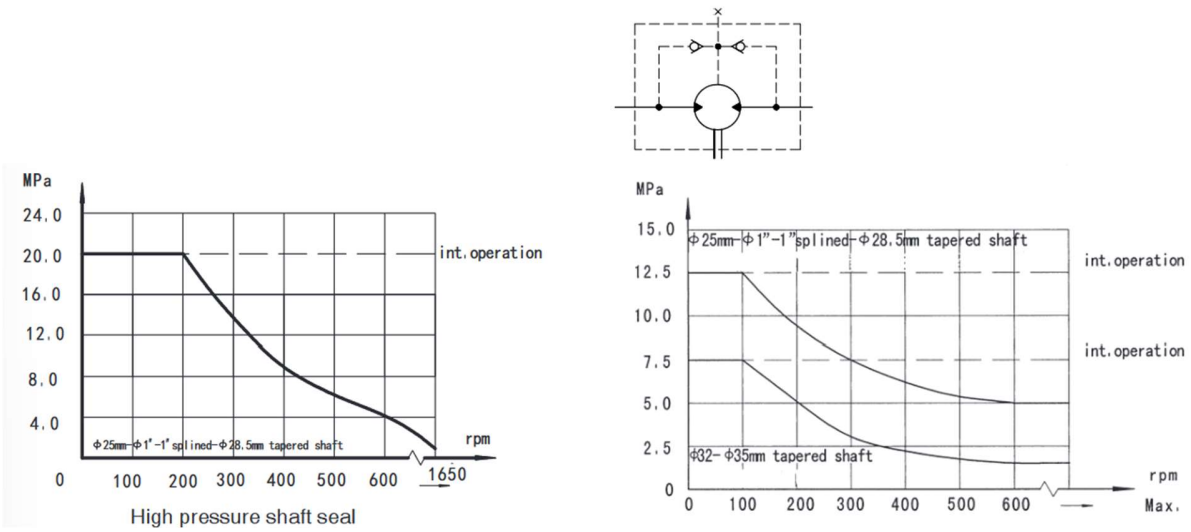


High pressure shaft seal

In applications without drain line, output shaft seal exceeds a bit of the pressure in the return line. When applications use the drain line, the pressure of output shaft seal equals the pressure in drain line.

## *Direction of shaft rotation: Standard*

When facing shaft end of motor, shaft to rotate:

- Clockwise when port "A" is pressurized.
- Counter-clockwise port "B" is pressurized.

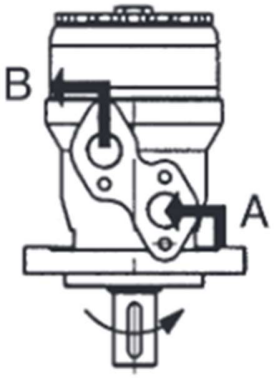


**FPMR**

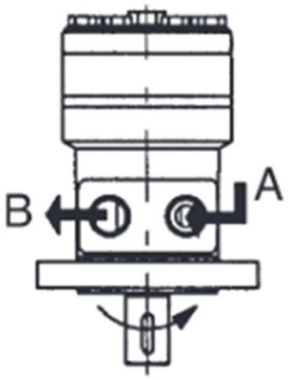


**FPMRS**

## Status of the shaft's radial force

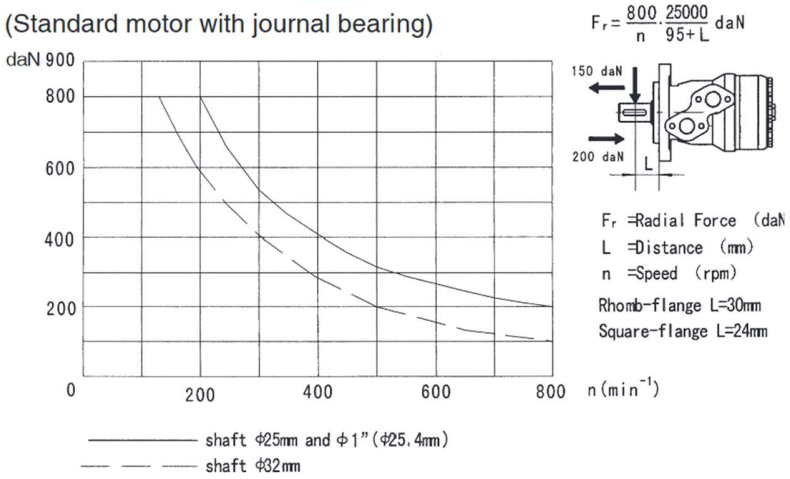


## Oil flow in drain line

The table shows the max. oil flow in the drain line at a return pressure less than 0.5-1 MPa.

| *Pressure drop (MPa)* | *Viscosity (mm²/s)* | *Oil flow in the drain line (L/min.)* |
|---|---|---|
| 10 | 20 | 2.5 |
| | 35 | 1.8 |
| 14 | 20 | 3.5 |
| | 35 | 2.8 |

# Order Information

## Order Information

FPMR – [ ] – [ ] – [ ] – [ ] – [ ] – [ ] – [ ] – [ ]

| Pos.1 | 2 | 3 | | 4 | | 5 | | 6 | | 7 | | 8 |
|---|---|---|---|---|---|---|---|---|---|---|---|---|
| Code | Disp. | Flange | | Output Shaft | | Ports and Drain Port | | Rotation Direction | | Paint | | Unusually Function |
| BMR | 36<br>50<br>80<br>100<br>125<br>160<br>200<br>250<br>315<br>375 | 2-Ø13.5Rhomb-flange, pilot Ø82.5x8<br>4-Ø13.5Rhomb-flange, pilot Ø82.5x8<br>4-3/8-16 Square-flange, pilot Ø44.4x2.8<br>4-M10 Square-flange, pilot Ø44.4x2.8 | 2<br>4<br>H4<br>H5 | A Shaft Ø25,parallel Key 8x7x32<br>C Shaft Ø25.4,parallel Key 6.35x6.35x31.75<br>E Shaft Ø25.4,splined tooth SAE 6B<br>R Short shaft Ø25.4,parallel key 6.35x6.35x31.75<br>T Cone-Shaft Ø28.56,parallel Key B5x5x14<br>B Shaft Ø32,parallel Key 10x8x45<br>F Shaft Ø31.75,splined tooth 14-DP12/24<br>FD Long shaft Ø31.75,splined tooth 14-DP12/24<br>G Shaft Ø31.75,parallel Key 7.96x7.96x31.75 | D<br>M<br>S<br>P<br>R | G1/2 Manifold Mount 4-M8, G1/4<br>M22x1.5 Manifold Mount 4-M8, M14x1.5<br>7/8-14 O-ring manifold 4-5/16-18UNC, 7/16-20UNF<br>1/2-14 NPTF Manifold 4-5/16-18UNC, 7/16-20UNF<br>PT(Rc)1/2 Manifold 4-M8, PT(Rc)1/4 | Omit<br>R | Standard<br>Opposite | 00<br>Omit<br>B<br>S | No paint<br>Blue<br>Black<br>Silver grey | Omit<br>N1<br>0<br>F<br>LS | Standard<br>Big radial force<br>No case drain<br>Free Running<br>Low Speed |

Note:The shafts of B\F\FD\G\T1\T3 are only suitable for flanges of 2 and 4.

FPMRS – [ ] – [ ] – [ ] – [ ] – [ ] – [ ] – [ ] – [ ]

| Pos.1 | 2 | 3 | | 4 | | 5 | | 6 | | 7 | | 8 |
|---|---|---|---|---|---|---|---|---|---|---|---|---|
| Code | Disp. | Flange | | Output Shaft | | Ports and Drain Port | | Rotation Direction | | Paint | | Unusually Function |
| BMRS | 36<br>50<br>80<br>100<br>125<br>160<br>200<br>250<br>315<br>375 | 2-Ø13.5Rhomb-flange, pilot Ø82.5x2.8<br>4-Ø13.5Rhomb-flange, pilot Ø82.5x2.8<br>4-3/8-16 Square-flange, pilot Ø44.4x2.8<br>4-M10 Square-flange, pilot Ø44.4x2.8 | H2<br>H6<br>H4<br>H5 | K Shaft Ø25.4,Woodruff Key Ø25.4x6.35<br>S Sub-shaft Ø25.4,splined tooth SAE 6B<br>A Shaft Ø25 , parallel key 8x7x32<br>R Shaft Ø25.4, parallel key 6.35x6.35x31.75<br>H Sub-shaft Ø25.4,Pin hole Ø10.3<br>H1 Shaft Ø25.4, pin hole Ø8<br>D Shaft Ø22.22, parallel key 6.35x6.35x25.4<br>I Shaft Ø22.22, splined tooth 13-DP16/32<br>T2 Cone shaft Ø25.4 , woodruff key Ø25.4x6.35<br>P Shaft Ø25,parallel Key 8x7x28<br>J Shaft Ø25,parallel Key 7x7x32 | G<br>S<br>P<br>T<br>R<br>B4<br>B5<br>M1<br>M2<br>M3 | G1/2, G1/4<br>7/8-14 O-ring 7/16-20UNF (G1/4)<br>1/2-14 NPTF, 7/16-20UNF (G1/4)<br>3/4-16 O-ring, 7/16-20UNF<br>PT(Rc)1/2, PT(Rc)1/4<br>Ø10 O-ring manifold 4x5/16-18, 7/16-20UNF<br>Ø10 O-ring manifold 4xM8, G1/4<br>M18x1.5, M10x1<br>M20x1.5, M10x1<br>M22x1.5, M10x1 | Omit<br>R | Standard<br>Opposite | 00<br>Omit<br>B<br>S | No paint<br>Blue<br>Black<br>Silver grey | Omit<br>N1<br>0<br>F<br>LS | Standard<br>Big radial force<br>No case drain<br>Free Running<br>Low Speed |

Note:When the table is used, please fill the code of left rows in dash area and give us, which the code information is consists of construction, displacement, mounting flange, output shaft and ports. If the specification is not in the table or you have specific requirements, please contact us.

# FPMRWN - DIMENSIONS MOUNTING DATA

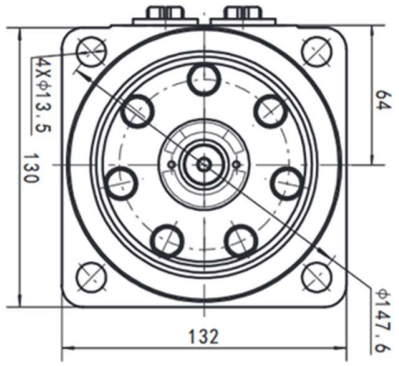


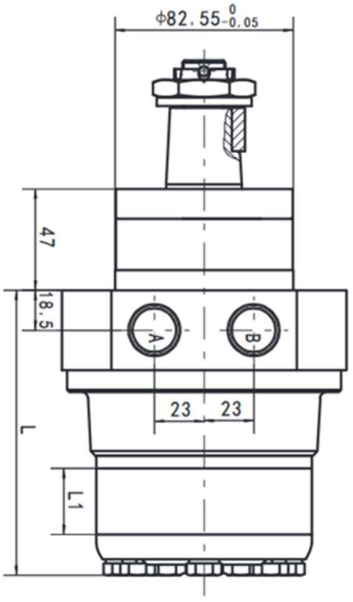


Order Information

| Pos.1 | 1 | 2 | 3 | 4 | 5 | 6 | 7 | 8 |
|---|---|---|---|---|---|---|---|---|
| Code | FPMRWN | – | Flange | Output shaft | Ports and drain port | Rotation direction | Paint | Unusually function |
| BMRWN | | 50<br>80<br>100<br>125<br>160<br>200<br>250<br>315<br>375 | Omit: 4-Ø13.5 Wheel Mount , Ø82.5x9.4 | T1: 1:10Cone shaft Ø35, parllel key B6x6x20<br>B: Shaft Ø32 , parllel key 10x8x4<br>F: Shaft Ø31.75, splined key 14-DP12/2<br>FD: Long Shaft Ø31.75, splined key14-DP12/24<br>G: Shaft Ø31.75, parllel key 7.96x7.96x31.75 | D: G1/2, G1/4<br>M: M22x1.5,M14x1.5<br>S: 7/8-14 O-ring,7/16-20UNF<br>P: 1/2-14NPTF, 7/16-20UNF | Omit: Standard<br>R: Opposite | 00: Omit<br>B: Blue<br>S: Black<br>Silver grey | Omit: Standard |

Note:When the table is used , please fill the code of right rows in the table and give us , which the code information is consists of construction , displacement , mounting flange output shaft and ports . If the specification is not in the table or you have specific requirements , please conact us .

| Model | L | L1 |
|---|---|---|
| BMRWN-50 | 113 | 10 |
| BMRWN-80 | 119 | 16 |
| BMRWN-100 | 123 | 20 |
| BMRWN-125 | 128 | 25 |
| BMRWN-160 | 133.5 | 30.5 |
| BMRWN-200 | 141 | 38.1 |
| BMRWN-250 | 153 | 50 |
| BMRWN-315 | 165 | 62 |
| BMRWN-375 | 177 | 74 |

| Mounting \ Code | G(depth) | M(depth) | S(depth) | P(depth) |
|---|---|---|---|---|
| P(A,B) | G1/2(15) | M22x1.5(15) | 7/8-14O-ring(17) | 1/2-14NPTF(15) |
| C | G1/4(12) | M14x1.5(12) | 7/16-20UNF(12) | 7/16-20UNF(12) |

# FPMR-BK01 SERIES - HYDRAULIC MOTOR WITH BRAKE

FPMR-BK01 Series hydraulic motor with brake extending FPMR series motor range. This motor has an integrated holding brake.

*Characteristic features:*

- Advanced manufacturing devices for the Geroler gear set, which use low pressure of start-up , provide smooth , reliable operation and high efficiency.
- Shaft seal can bear high pressure of back and the motor can be use in parallel or in series.
- Special design in the driver-linker and prolong operating life.
- Special design for distribution system can meet the requirement of low noise of unit.
- Compact volume and easy installation.
- Small volume and radial dimension, high holding torque, power brake, low weight and easy to install.

## Main Specification

| Type | | FPMR -BK01 50 | FPMR -BK01 80 | FPMR -BK01 100 | FPMR -BK01 125 | FPMR -BK01 160 | FPMR -BK01 200 | FPMR -BK01 250 | FPMR -BK01 315 | FPMR -BK01 375 |
|---|---|---|---|---|---|---|---|---|---|---|
| Displacement (cm³/rev) | | 51.7 | 81.5 | 102 | 127.2 | 157.2 | 194.5 | 253.3 | 317.5 | 381.4 |
| Max. speed (rpm) | rated | 490 | 479 | 478 | 421 | 341 | 276 | 212 | 169 | 141 |
| | cont. | 509 | 502 | 497 | 459 | 372 | 301 | 231 | 184 | 166 |
| | int. | 603 | 598 | 574 | 574 | 465 | 376 | 289 | 230 | 192 |
| Max. torque (Nm) | rated | 104 | 164 | 205 | 256 | 316 | 335 | 437 | 456 | 465 |
| | cont. | 103 | 203 | 254 | 317 | 391 | 359 | 437 | 456 | 465 |
| | int. | 88.6 | 160 | 200 | 250 | 308 | 333 | 473 | 502 | 520 |
| Max. output (KW) | rated | 5.3 | 8.2 | 10.3 | 11.3 | 11.3 | 9.7 | 9.7 | 8.1 | 6.9 |
| | cont. | 5.5 | 10.7 | 13.2 | 15.2 | 15.2 | 11.3 | 10.6 | 8.8 | 8.1 |
| | int. | 5.6 | 10 | 12 | 15 | 15 | 13.1 | 14.3 | 12.1 | 10.5 |
| Max. Pressure drop (MPa) | rated | 14 | 14 | 14 | 14 | 14 | 12 | 12 | 10 | 8.5 |
| | cont. | 14 | 17.5 | 17.5 | 17.5 | 17.5 | 13 | 12 | 10 | 8.5 |
| | int. | 17.5 | 20 | 20 | 20 | 20 | 17.5 | 13 | 11 | 9.5 |
| Max. Flow (L/min) | rated | 26 | 40 | 50 | 55 | 55 | 55 | 55 | 55 | 55 |
| | cont. | 27 | 42 | 52 | 60 | 60 | 60 | 60 | 60 | 65 |
| | int. | 32 | 50 | 60 | 75 | 75 | 75 | 75 | 75 | 75 |
| Min. opening pressure (MPa) | | 1.7——2.2 | | | | | | | | |
| Max. inlet pressure (MPa) | | 25 | | | | | | | | |
| Max. brake release port pressure (MPa) | | 25 | | | | | | | | |
| Max. static torque (Nm) | | 500——550 | | | | | | | | |
| Weight (kg) | | 11.7 | 11.9 | 11.9 | 12.2 | 12.5 | 13 | 13.5 | 14 | 14.5 |

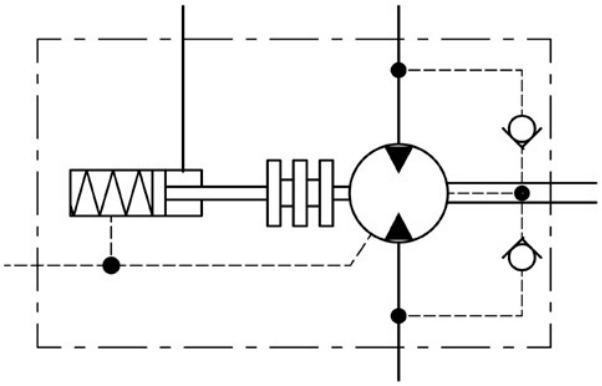

- Rated speed and rated torque: output value of speed and torque under rated flow and rated pressure.
- Continuous pressure: Max. value of operating motor continuously.
- Intermittent pressure: Max. value of operating motor in 6 seconds per minute.
- Peak pressure: Max. value of operating motor in 0.6 second per minute.
- Such kind of brake is only used in static paring brake. Dynamic braking in not recommended.

When the motor integrated with brake is working, the pressure at releasing port must be more than 2.2 MPa. In the status of braking, the pressure at releasing port must be less than 1.7 MPa, optimally 0 MPa. It is attention in use that the back pressure of the oil circuit is the best 0 MPa.

# FPMR-BK01 - DIMENSIONS AND MOUNTING DATA

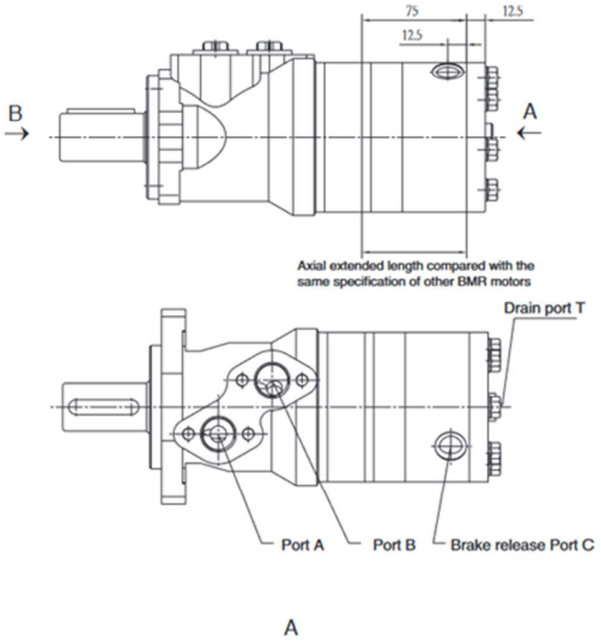


A

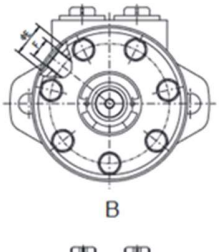

B

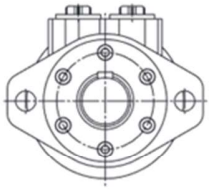

| Model Port C | ΦE | F |
|---|---|---|
| G | 22 | G1/4 Depth 9 |

Note: The mount data is completely referred to FPMR series motor. The axial extended length reduces 75mm as picture. Port C is brake releasing port, the position is as picture.

## Order information

FPMR-BK01 | 1 | 2 | 3 | 4 | 5 | 6 | 7 | 8 | 9

| Pos.1 | 2 | 3 | | 4 | | 5 | | 6 | 7 | | 8 | | 9 |
|---|---|---|---|---|---|---|---|---|---|---|---|---|---|
| Code | Disp. | Flange | | Output Shaft | | Ports and Drain Port | | Brake release Port | Rotation Direction | | Paint | | Unusually Function |
| Omit | 50 | 2 | 2-Ø13.5Rhomb-flange, pilot Ø82.5x8 | A | Shaft Ø25,parallel Key 8x7x32 | D | G1/2 Manifold Mount 4xM8, G1/4 | G | G1/4 Depth 9 facing Ø22 | Omit | Standard | 00 | No paint | N1 | Big radial force |
| | 80 | | | C | Shaft Ø25.4,parallel Key 6.35x6.35x31.75 | M | M22x1.5 Manifold Mount 4xM8, M14x1.5 | | | R | Opposite | Omit | Blue | | |
| | 100 | 4 | 4-Ø13.5Rhomb-flange, pilot Ø82.5x8 | E | Shaft Ø25.4,splined tooth SAE 6B | S | 7/8-14 O-ring manifold 4x5/16-18UNC, 7/16-20UNF 1/2-14NPTF Manifold 4x5/16-18UNC, 7/16-20UNF | | | | | B | Black | | |
| | 125 | | | R | Short shaft Ø25.4,parallel Key 6.35x6.35x31.75 | | | | | | | S | Silver grey | | |
| | 160 | H4 | 4-3/8-16Square-flange, pilot Ø44.4x2.8 | B | Shaft Ø32,parallel Key 10x8x45 | P | | | | | | | | | |
| | 200 | | | F | Shaft Ø31.75,splined tooth 14-DP12/24 | | | | | | | | | | |
| | 250 | H5 | 4-M10Square-flange, pilot Ø44.4x2.8 | FD | Long shaft Ø31.75,splined tooth 14-DP12/24 | | | | | | | | | | |
| | 315 | | | G | Shaft Ø31.75,parallel Key 7.96x7.96x31.75 | | | | | | | | | | |
| | 375 | | | T | Cone-Shaft Ø28.56,parallel Key B5x5x14 | R | PT(Rc)1/2 Manifold 4xM8, PT(Rc)1/4 | | | | | | | | |

Note:When the table is used, please fill the code of right rows in the table and give us, which the code information is consists of construction, displacement, mounting flange, output shaft and ports. If the specification is not in the table or you have specific requirements, please contact us.

Note:The shafts of P1P2P3/Q1T1T2 are only suitable for flanges of 2 and 4

# OK SERIES HYDRAULIC MOTOR

OK series motor adapt the advanced Geroler gear set design with shaft distribution flow, which can automatically compensate in operating with high pressure, provide reliable and smooth operation, high efficiency and long life.

*Characteristic features:*

- Advanced manufacturing devices for the Geroler gear set, which use low pressure of start-up, provide smooth, reliable operation and high efficiency.
- Shaft seal can bear high pressure of back and the motor can be used in parallel or in series.
- Special design in the driver-linker and prolong operating life
- Special design for distribution system can meet the requirement of low noise of unit.
- Compact volume and easy installation

## *Main Specification*

*Technical data for OK with 25 and 1 in and 1 in splined and 28.56 tapered shaft*

| *Code* | *Displacement [cm³/rev]* | *Max. speed [rpm]* | *Max. torque [Nm]* | | *Max. output [kW]* | | *Max. pressure [MPa]* | | *Max. oil flow [L/min]* |
|---|---|---|---|---|---|---|---|---|---|
| | | cont. | cont. | int. | cont. | int. | cont. | int. | cont. |
| OK 36 | 36 | 1111 | 66 | 83 | 9 | 10.4 | 14 | 17.5 | 40 |
| OK 50 | 51.7 | 780 | 100 | 129 | 9 | 10.4 | 14 | 17.5 | 40 |
| OK 80 | 81.5 | 744 | 158 | 196 | 10.4 | 12.6 | 14 | 17.5 | 60 |
| OK 100 | 102 | 595 | 200 | 242 | 10.8 | 12.8 | 14 | 17.5 | 60 |
| OK 125 | 127.2 | 480 | 248 | 298 | 10.8 | 12.5 | 14 | 17.5 | 60 |
| OK 160 | 157.2 | 382 | 315 | 384 | 10.4 | 11.5 | 14 | 17.5 | 60 |
| OK 200 | 194.5 | 301 | 339 | 419 | 8.8 | 10.2 | 12.5 | 15.5 | 60 |
| OK 250 | 253.3 | 238 | 403 | 474 | 8.1 | 9.4 | 11 | 14 | 60 |
| OK 315 | 317.5 | 191 | 398 | 498 | 7.4 | 7.8 | 9 | 12.5 | 60 |
| OK 375 | 381.4 | 162 | 373 | 466 | 6.2 | 7.1 | 7.5 | 9 | 60 |

| Type | H | L |
|---|---|---|
| OK36 | 7 | 105 |
| OK50 | 10 | 108 |
| OK80 | 16 | 114 |
| OK100 | 20 | 118 |
| OK125 | 25 | 123 |
| OK160 | 30.5 | 128.5 |
| OK200 | 38.1 | 136 |
| OK250 | 50 | 148 |
| OK315 | 62 | 160 |
| OK375 | 74 | 172 |

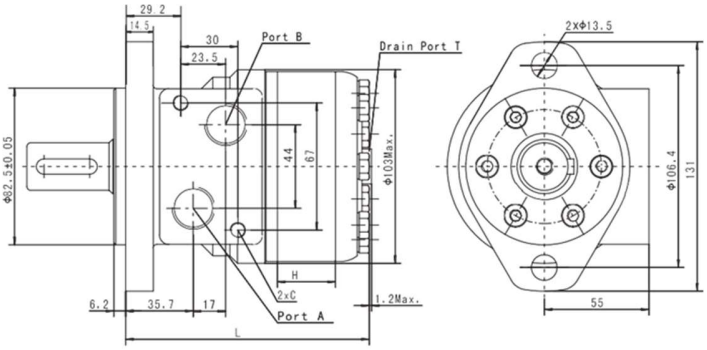


## *Direction of shaft rotation: Standard*

When facing shaft end of motor, shaft to rotate:

- Clockwise when port "A" is pressurized.
- Counter-clockwise when port "B" is pressurized.

| Code Mounting | D (depth) | M (depth) | S (depth) | P (depth) | R (depth) | |
|---|---|---|---|---|---|---|
| P(A,B) | G1/2 (15) | M22 x 1.5 (15) | 7/8-14 O-ring (16.7) | 1/2-14NPTF (15) | PT(RC)1/2 (15) | 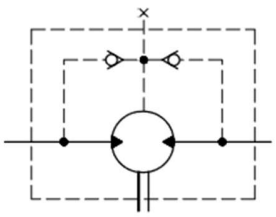 |
| C | 4-M8 (13) | 4-M8(13) | 4-5/16-18UNC(13) | 4-5/16-18UNC(13) | 4-M8 (13) | |
| T | G1/4 (12) | M14 x 1.5 (12) | 7/16-20UNF (12) | 7/16-20UNF (12) | PT(RC)1/4 (9.7) | |

# SHAFT EXTENSIONS FOR OK MOTORS

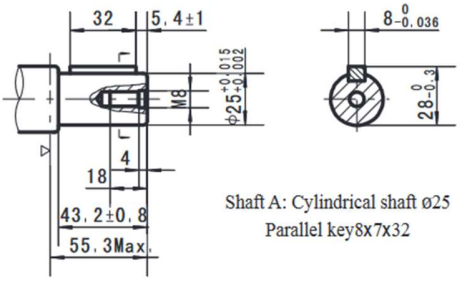


Shaft A: Cylindrical shaft ø25
Parallel key8x7x32

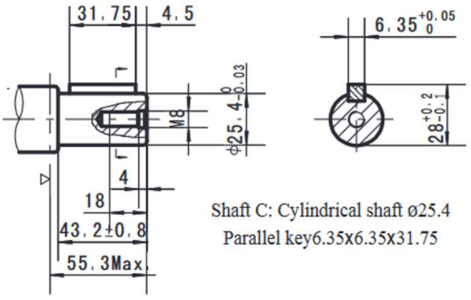


Shaft C: Cylindrical shaft ø25.4
Parallel key6.35x6.35x31.75

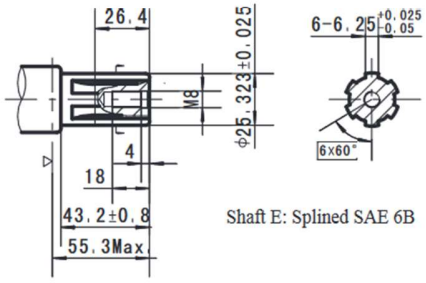


Shaft E: Splined SAE 6B

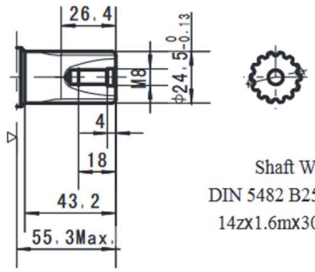


Shaft W:
DIN 5482 B25x22h9
14zx1.6mx30Px9h

▷ Motor Mounting Surface

| OK | – | | – | | – | | – | | – | | – | | – | |
|---|---|---|---|---|---|---|---|---|---|---|---|---|---|---|
| Pos.1 | 2 | | 3 | | 4 | | 5 | | 6 | | 7 | | 8 | |
| Code | Disp. | | Flange | | Output Shaft | | Ports and Drain Port | | Rotation Direction | | Paint | | Unusually Function | |
| Omit | 36 | 2 | 2-Ø13.5 Rhomb-flange, pilot Ø82.5x6.2 | A | Shaft Ø25 , parllel key 8x7x32 | D | G1/2 Manifold 4xM8, G1/4 | Omit | Standard | 00 | No paint | Omit | Standard Free Running No case drain |
| | 50 | | | C | Shaft Ø25.4 , parllel key 6.35x6.35x31.75 | M | M22x1.5 Manifold4xM8,M14x1.5 | R | Opposite | Omit | Blue | F | |
| | 80 | | | E | Shaft Ø25.4, splined key SEA 6B | S | 7/8-14 O-ring manifold | | | B | Black | 0 | |
| | 100 | | | W | Shaft Ø24.5, splined B25X22 | | 4x5/16-18UNC,7/16-20UNF | | | S | Silver grey | | |
| | 125 | | | T | Cone shaft Ø28.56, parllel key B5x5x14 | P | 1/2-14NPTF manifold | | | | | | |
| | 160 | | | | | | 4x5/16-18UNC,7/16-20UNF | | | | | | |
| | 200 | | | | | R | PT(Rc)1/2 manifold 4xM8,PT(Rc)1/4 | | | | | | |
| | 250 | | | | | | | | | | | | |
| | 315 | | | | | | | | | | | | |
| | 375 | | | | | | | | | | | | |

# FPMH SERIES HYDRAULIC MOTOR

FPMH series motor adapt the advanced Geroler gear set design with shaft distribution flow, which can automatically compensate in operating with high pressure, provide reliable and smooth operation, high efficiency and long life.

*Characteristic features:*

- Advanced manufacturing devices for the Geroler gear set, which use low pressure of start-up, provide smooth, reliable operation and high efficiency.
- Shaft seal can bear high pressure of back and the motor can be used in parallel or series.
- Special design in the driver-linker and prolong operating life.
- Special design for distribution system can meet the requirement of low noise of unit.
- Compact volume and easy installation

## *Main Specification*

| *Type* | | *FPMH 200* | *FPMH 250* | *FPMH 315* | *FPMH 400* | *FPMH 500* |
|---|---|---|---|---|---|---|
| *displacement (cm³/rev)* | | 203.2 | 255.9 | 316.1 | 406.4 | 489.2 |
| *Max. speed (rpm)* | *cont.* | 366 | 290 | 236 | 183 | 155 |
| | *int.* | 439 | 348 | 282 | 220 | 184 |
| *Max. torque (Nm* | *cont.* | 510 | 621 | 740 | 850 | 830 |
| | *int.* | 579 | 702 | 827 | 990 | 1040 |
| | *peak* | 651 | 790 | 980 | 1092 | 1170 |
| *Max. output (kW)* | *cont.* | 16 | 16 | 14 | 12.5 | 11 |
| | *int.* | 18.5 | 18.5 | 15.5 | 15 | 14 |
| *Max. pressure Drop (MPa)* | *cont.* | 17.5 | 17.5 | 17.5 | 15.5 | 12.5 |
| | *int.* | 20 | 20 | 20 | 19 | 16 |
| | *peak* | 22.5 | 22.5 | 22.5 | 21 | 18 |
| *Max. flow (L/min)* | *cont.* | 75 | 75 | 75 | 75 | 75 |
| | *int.* | 90 | 90 | 90 | 90 | 90 |
| *Weight (kg)* | | 10.5 | 11 | 11.5 | 12.3 | 13 |

| *Type* | | Max.inlet pressure | Max.return pressure with drain line |
|---|---|---|---|
| *FPMH200-500 (MPa)* | *cont.* | 20 | 17.5 |
| | *int.* | 22.5 | 20 |
| | *peak* | 25 | 22.5 |

- Continuous pressure: Max. value of operating motor continuously.
- Intermittent pressure: Max. value of operating motor in 6 seconds per minute.
- Peak pressure: Max. value of operating motor in 0.6 second per minute.
- Technical data FPMH with 35mm cylindnical,1 1/4 in splined and 35mm tapered shaft.

## *Performance Data*

FPMH 200 [203.2 cm³/rev]

| Flow (L/min) | Pressure (MPa) 3.5 | 7 | 10.5 | 14 | Max.cont. 17.5 | Max.int. 20 |
|---|---|---|---|---|---|---|
| 5 | 98 / **25** | 194 / **25** | 284 / **22** | | | |
| 10 | 101 / **43** | 204 / **41** | 301 / **36** | 391 / **29** | 482 / **14** | |
| 20 | 99 / **100** | 201 / **97** | 304 / **93** | 402 / **85** | 509 / **69** | 576 / **56** |
| 30 | 97 / **145** | 197 / **143** | 300 / **139** | 402 / **130** | 510 / **114** | 579 / **101** |
| 40 | 90 / **200** | 190 / **200** | 292 / **200** | 399 / **188** | 507 / **168** | 578 / **153** |
| 50 | 82 / **248** | 183 / **246** | 284 / **244** | 392 / **235** | 500 / **213** | 571 / **199** |
| 60 | 73 / **292** | 174 / **290** | 274 / **287** | 384 / **279** | 493 / **260** | 563 / **244** |
| 70 | 63 / **352** | 163 / **350** | 264 / **349** | 374 / **338** | 481 / **318** | 554 / **301** |
| Max.cont. 75 | 59 / **366** | 157 / **365** | 259 / **363** | 366 / **355** | 475 / **335** | 547 / **319** |
| 80 | 53 / **381** | 150 / **381** | 253 / **380** | 358 / **371** | 466 / **352** | 538 / **338** |
| Max.int. 90 | 39 / **439** | 140 / **437** | 241 / **434** | 348 / **426** | 456 / **407** | 526 / **392** |

FPMH 250 [255.9 cm³/rev]

| Flow (L/min) | Pressure (MPa) 3.5 | 7 | 9 | 12 | 14.5 | Max.cont. 17.5 | Max.int. 20 |
|---|---|---|---|---|---|---|---|
| 5 | 121 / **19** | 246 / **19** | 318 / **18** | 398 / **14** | | | |
| 10 | 130 / **34** | 258 / **33** | 331 / **31** | 425 / **29** | 515 / **23** | 595 / **12** | |
| 20 | 130 / **78** | 258 / **77** | 332 / **76** | 432 / **73** | 520 / **65** | 621 / **53** | 702 / **42** |
| 30 | 122 / **115** | 251 / **113** | 327 / **111** | 429 / **105** | 520 / **96** | 621 / **84** | 700 / **75** |
| 40 | 115 / **157** | 240 / **157** | 323 / **156** | 422 / **150** | 513 / **139** | 616 / **127** | 698 / **114** |
| 50 | 105 / **196** | 232 / **195** | 314 / **192** | 411 / **185** | 505 / **173** | 606 / **159** | 687 / **147** |
| 60 | 94 / **232** | 220 / **230** | 302 / **226** | 401 / **218** | 496 / **206** | 596 / **192** | 676 / **180** |
| 70 | 81.4 / **274** | 209 / **274** | 288 / **274** | 389 / **266** | 484 / **252** | 582 / **238** | 666 / **222** |
| Max.cont. 75 | 72 / **290** | 203 / **289** | 280 / **287** | 381 / **279** | 475 / **266** | 574 / **251** | 659 / **236** |
| 80 | 66 / **303** | 194 / **302** | 273 / **298** | 371 / **290** | 467 / **279** | 566 / **264** | 651 / **249** |
| Max.int. 90 | 49 / **348** | 178 / **347** | 256 / **345** | 355 / **337** | 453 / **325** | 552 / **309** | 634 / **292** |

## FPMH 315 [316.1 cm³/rev]

| Flow (L/min) | Pressure (MPa) 3.5 | 7.5 | 10 | 13.5 | 15.5 | 17.5 | Max.cont. 20 (Max.int.) |
|---|---|---|---|---|---|---|---|
| 5 | 155 **16** | 325 **13** | | | | | |
| 10 | 163 **27** | 342 **24** | 454 **18** | 556 **14** | | | |
| 20 | 169 **63** | 349 **61** | 469 **55** | 582 **48** | 664 **40** | 733 **32** | 809 **19** |
| 30 | 165 **93** | 344 **89** | 470 **82** | 580 **77** | 669 **67** | 740 **59** | 824 **46** |
| 40 | 154 **126** | 337 **126** | 465 **119** | 577 **111** | 663 **99** | 737 **88** | 827 **73** |
| 50 | 141 **159** | 325 **155** | 455 **148** | 568 **139** | 656 **126** | 728 **115** | 824 **98** |
| 60 | 121 **187** | 312 **186** | 440 **179** | 555 **169** | 643 **154** | 715 **143** | 812 **124** |
| 70 | 103 **222** | 298 **222** | 425 **215** | 541 **205** | 631 **187** | 703 **176** | 800 **157** |
| Max.cont. 75 | 94 **236** | 287 **233** | 417 **224** | 529 **215** | 623 **196** | 696 **184** | 792 **166** |
| 80 | 82 **246** | 277 **244** | 406 **236** | 518 **228** | 611 **210** | 688 **197** | 784 **174** |
| Max.int. 90 | 62 **282** | 256 **280** | 386 **275** | 496 **266** | 593 **248** | 669 **234** | 767 **209** |

Torque (N•m) 593
Speed (rpm) **248**

## FPMH 400 [406.4 cm³/rev]

| Flow (L/min) | Pressure (MPa) 3.5 | 6 | 10.5 | 12.5 | 15.5 | Max.cont. 19 (Max.int.) |
|---|---|---|---|---|---|---|
| 5 | 196 **13** | 348 **13** | 516 **10** | | | |
| 10 | 205 **22** | 363 **21** | 546 **21** | 702 **17** | 859 **11** | |
| 20 | 209 **50** | 366 **49** | 543 **46** | 708 **41** | 874 **36** | 988 **31** |
| 30 | 201 **73** | 357 **72** | 542 **70** | 706 **63** | 864 **56** | 984 **51** |
| 40 | 195 **99** | 346 **98** | 532 **96** | 701 **86** | 858 **77** | 973 **71** |
| 50 | 173 **123** | 332 **122** | 518 **118** | 687 **107** | 848 **97** | 958 **90** |
| 60 | 154 **146** | 319 **144** | 501 **141** | 668 **128** | 833 **115** | 944 **106** |
| 70 | 138 **174** | 305 **173** | 480 **169** | 649 **156** | 814 **141** | 925 **130** |
| Max.cont. 75 | 128 **183** | 294 **181** | 466 **177** | 637 **163** | 802 **149** | 911 **138** |
| 80 | 113 **192** | 277 **191** | 451 **188** | 621 **174** | 786 **158** | 899 **144** |
| Max.int. 90 | 90 **220** | 256 **220** | 433 **215** | 595 **202** | 767 **183** | 881 **165** |

cont.
int.

## FPMH 500 [489.2 cm³/rev]

| Flow (L/min) | Pressure (MPa) 2.5 | 5 | 8.5 | 10 | 12.5 | Max.cont. 16 (Max.int.) |
|---|---|---|---|---|---|---|
| 5 | 165 **11** | 317 **11** | 516 **8** | | | |
| 10 | 178 **20** | 335 **19** | 555 **17** | 669 **15** | 791 **13** | 969 **9** |
| 20 | 177 **42** | 331 **42** | 559 **41** | 673 **38** | 799 **36** | 988 **29** |
| 30 | 172 **64** | 320 **63** | 553 **61** | 663 **57** | 792 **53** | 983 **47** |
| 40 | 163 **85** | 309 **85** | 541 **83** | 654 **79** | 783 **75** | 971 **67** |
| 50 | 146 **103** | 296 **103** | 523 **103** | 635 **97** | 768 **93** | 954 **85** |
| 60 | 121 **124** | 275 **124** | 502 **123** | 614 **117** | 747 **113** | 934 **103** |
| 70 | 97 **148** | 256 **148** | 482 **148** | 597 **140** | 729 **134** | 917 **122** |
| Max.cont. 75 | 79 **155** | 240 **155** | 469 **155** | 582 **152** | 714 **144** | 902 **130** |
| 80 | 60 **166** | 226 **166** | 453 **166** | 570 **159** | 701 **153** | 884 **139** |
| Max.int. 90 | 34 **184** | 201 **183** | 421 **182** | 550 **177** | 673 **166** | 869 **155** |

cont
int.

Torque (N•m) 673
Speed (rpm) **166**

# FPMH - DIMENSIONS AND MOUNTING DATA

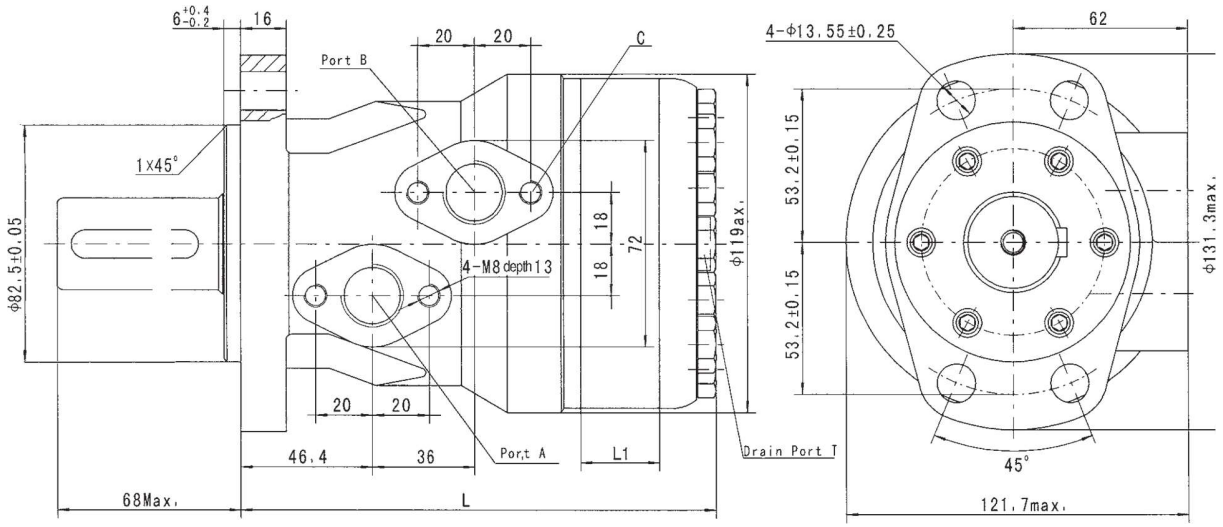


| Model | L | L1 |
|---|---|---|
| FPMH-160 | 162 | 21 |
| FPMH-200 | 168 | 27 |
| FPMH-250 | 175 | 34 |
| FPMH-315 | 183 | 42 |
| FPMH-400 | 195 | 54 |
| FPMH-500 | 206 | 65 |

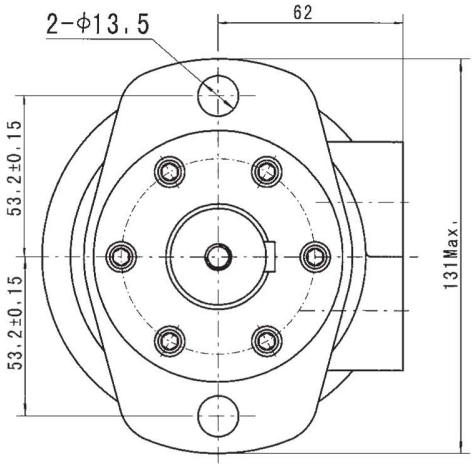


| Code Mounting | D (depth) | M (depth) | S (depth) | P (depth) | R (depth) |
|---|---|---|---|---|---|
| P(A,B) | G1/2 (15) | M22 x 1.5 (15) | 7/8-14 O-ring (15) | 1/2-14NPTF (15) | PT(RC)1/2 (15) |
| C | 4-M8 (13) | 4-M8 (13) | 4-5/16-18UNC(13) | 4-5/16-18UNC(13) | 4-M8 (13) |
| T | G1/4 (12) | M14 x 1.5 (12) | 7/16-20UNF(12) | 7/16-20UNF (12) | PT(RC)1/4 1/4 |

# FPMH - SHAFT EXTENSIONS DIMINSIONS DATA

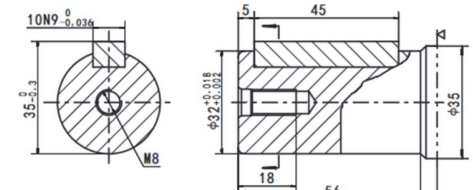


Shaft B: Cylindrical shaft Ø32
Parallel key 10X8X45

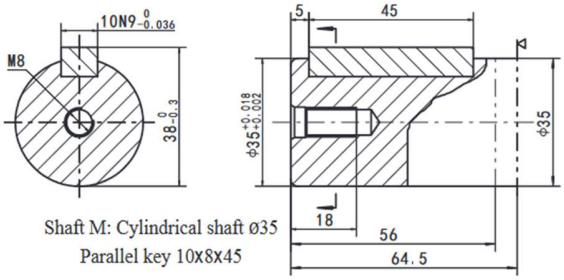


Shaft M: Cylindrical shaft Ø35
Parallel key 10X8X45

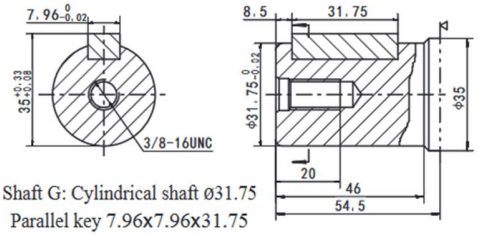


Shaft G: Cylindrical shaft Ø31.75
Parallel key 7.96X7.96X31.75

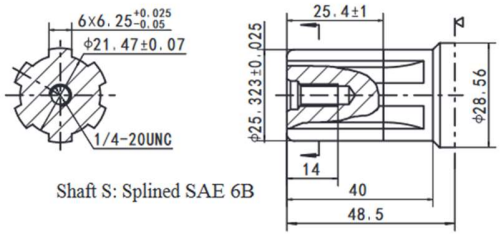


Shaft S: Splined SAE 6B

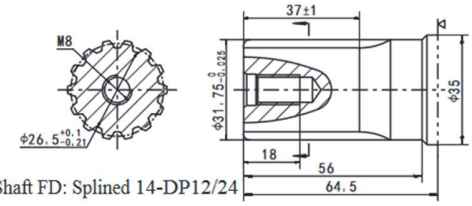


Shaft FD: Splined 14-DP12/24

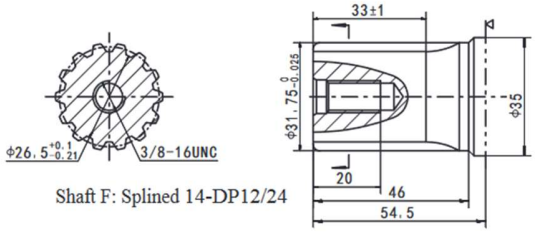


Shaft F: Splined 14-DP12/24

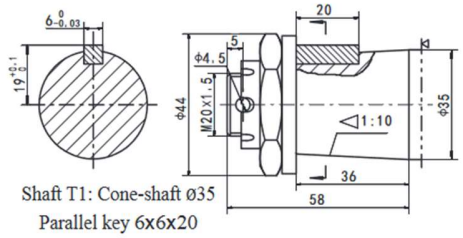


Shaft T1: Cone-shaft Ø35
Parallel key 6x6x20
Tightening torque:200±10Nm

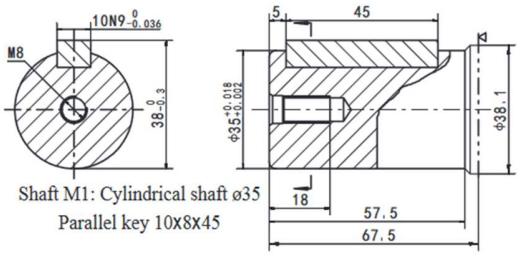


Shaft M1: Cylindrical shaft ø35
Parallel key 10X8X45

▷ Motor Mounting Surface

## *Permissible shaft seal pressure*

In applications without drain line, output shaft seal exceeds a bit of the pressure in the return line. When applications use the drain line, the pressure of output shaft seal equals the pressure in drain line.

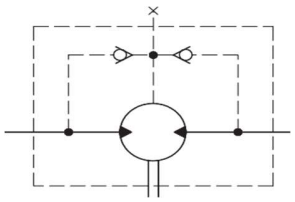

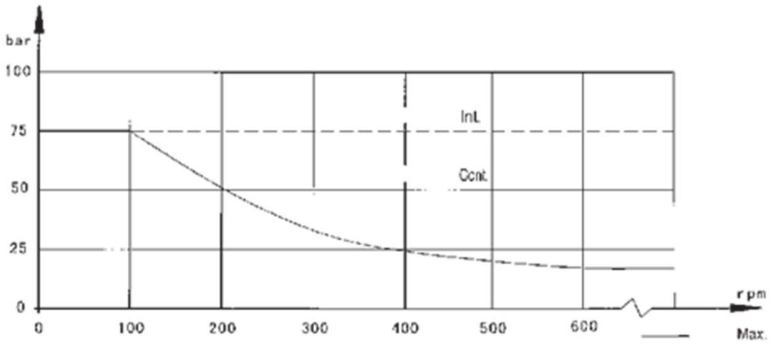


## *Direction of shaft rotation: Standard*

When facing shaft end of motor, shaft to rotate:

- Clockwise when port "A" is pressurized.
- Counter-clockwise port "B" is pressurized.

**FPMH**

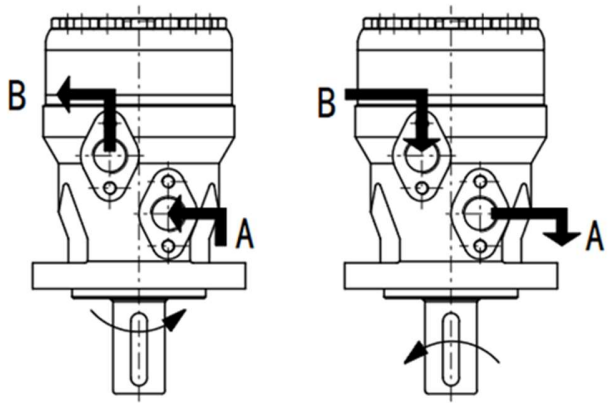

## *Status of the shaft's radial force*

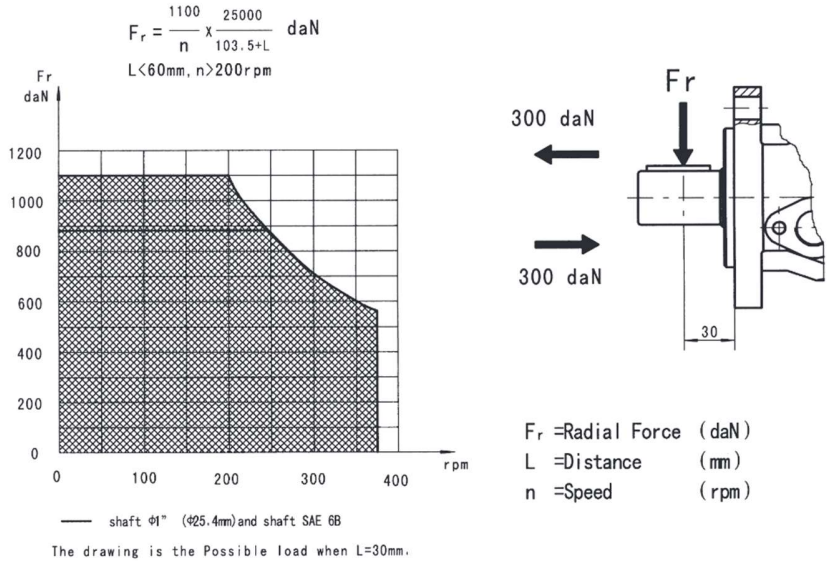


## *Oil flow in drain line*

The table shows the max. oil flow in the drain line at a return pressure less than 0.5-1 MPa.

| *Pressure drop (MPa)* | *Viscosity (mm²/s)* | *Oil flow in the drain line (L/min)* |
|---|---|---|
| 10 | 20 | 2.5 |
| | 35 | 1.8 |
| 14 | 20 | 3.5 |
| | 35 | 2.8 |

# Order Information

## Order Information

| | 1 | 2 | 3 | 4 | 5 | 6 | 7 | 8 |
|---|---|---|---|---|---|---|---|---|
| | FPMH | - | - | - | - | - | - | - |

| Pos.1 | 2 | 3 | | 4 | | 5 | | 6 | | 7 | | 8 | |
|---|---|---|---|---|---|---|---|---|---|---|---|---|---|
| Code | | Flange | | Output shaft | | Ports and drain port | | Rotation direction | | Paint | | Unusually function | |
| Omit | 160 | 4 | 4×Ø13.5 Rhombxflange Pilot Ø82.5x6 | B | Shaft Ø32 , parallel key 10x8x45 | D | G1/2 Manifold mount 4xM8, G1/4 | Omit | Standard | 00 | No paint | Omit | Standard |
| | 200 | | | M1 | Shaft Ø35, parallel key 10x8x45 | M | M22x1.5 Manifold mount 4xM8, | R | Opposite | Omit | Blue | 0 | No drain |
| | 250 | | | F | Shaft Ø31.75, splined key 14-DP12/24 | S | M14x1.5 7/8-14 Oxring Manifold mount | | | B | Black | F | Free Running |
| | 315 | 2 | 2×Ø13.5 Rhombxflange Pilot Ø82.5x6 | FD | Long Shaft Ø31.75, splined key 14-DP12/24 | P | 4x5/16-18UNC,7/16-20UNF 1/2-14 NPTF Manifold mount | | | S | Silver grey | LS | Low Speed |
| | 400 | | | G | Shaft Ø32 , parallel key 7.96x7.96x31.75 | | 4x5/16-18UNC,7/16-20UNF | | | | | N1 | Big radial force |
| | 470 | | | T1 | Cone shaft Ø35, parallel key B6x6x20 | R | PT(Rc) 1/2 Manifold mount 4xM8,PT(Rc)1/4 | | | | | | |
| | 500 | | | S | Shaft Ø25.4 , parallel key SAE 6B | | | | | | | | |
| | | | | M | Shaft Ø35,Parallel key 10x8x45 | | | | | | | | |

Note:When the table is used, please fill the code of left rows in dash area and give us, which the code information is consists of construction, displacement, mounting flange, output shaft and ports. If the specification is not in the table or you have specific requirements, please contact us.

# FPMSY SERIES HYDRAULIC MOTOR

FPMSY new series motor adapt the advanced Geroler gear set designed with disc distribution flow and high pressure. The unit can be supplied the individual variant in operating multifunction in accordance with requirement of applications.

*Characteristic features:*

- Advanced manufacturing devices for the Geroler gear set, which use low pressure of start-up, provide smooth and reliable operation and high efficiency.
- The output shaft adapts in tapered roller bearings that permit high axial and radial forces. The case can offers capacities of high pressure and high torque in the wide of applications.
- Advanced design in disc distribution flow, which can automatically compensate in operating with high volume efficiency and long life, provide smooth and reliable operation.
- The new series motor is suitable for vehicles with greater loads and pressure drop.

## *Main Specification*

| *Type* | | *FPMSY FPMSY S 80* | *FPMSY FPMSY S 100* | *FPMSY FPMSY S 125* | *FPMSY FPMSY S 160* | *FPMSY FPMSY S 200* | *FPMSY FPMSY S 250* | *FPMSY FPMSY S 315* | *FPMSY FPMSY S 400* | *FPMSY FPMSY S 475* |
|---|---|---|---|---|---|---|---|---|---|---|
| displacement ($cm^3$/rev) | | 80.6 | 100.8 | 125 | 154 | 194 | 243 | 311 | 394 | 475 |
| Max. speed (rpm) | cont. | 800 | 748 | 600 | 470 | 375 | 300 | 240 | 185 | 155 |
| | int. | 988 | 900 | 720 | 560 | 450 | 360 | 280 | 225 | 185 |
| Max. torque (Nm) | cont. | 225 | 290 | 365 | 485 | 586 | 708 | 880 | 880 | 910 |
| | int. | 305 | 390 | 480 | 590 | 705 | 860 | 1000 | 980 | 990 |
| Max. output (kW) | cont. | 16 | 18 | 18 | 18.1 | 18.1 | 18 | 17 | 11 | 9 |
| | int. | 20 | 22 | 23 | 25 | 24 | 23.8 | 20.2 | 12 | 11 |
| Max. pressure drop (MPa) | cont. | 20.5 | 20.5 | 20.5 | 21 | 21 | 20 | 20 | 16 | 14 |
| | int. | 27.5 | 27.5 | 27.5 | 26 | 25 | 25 | 24 | 19 | 15 |
| | peak | 29.5 | 29.5 | 29.5 | 28 | 27 | 27 | 26 | 21 | 17.5 |
| Max. flow (L/min) | cont. | 65 | 75 | 75 | 75 | 75 | 75 | 75 | 75 | 75 |
| | int. | 80 | 90 | 90 | 90 | 90 | 90 | 90 | 90 | 90 |
| Max. inlet Pressure (MPa) | cont. | 25 | 25 | 25 | 25 | 25 | 25 | 25 | 25 | 25 |
| | int. | 30 | 30 | 30 | 30 | 30 | 30 | 30 | 30 | 30 |
| Weight (kg) | | 9.8 | 10 | 10.3 | 10.7 | 11.1 | 11.6 | 12.3 | 13.2 | 14.3 |

- Continuous pressure: Max. value of operating motor continuously.
- Intermittent pressure: Max. value of operating motor in 6 seconds per minute.
- Peak pressure: Max. value of operating motor in 0.6 second per minute.

## *Performance Data*

### FPMSY 80 [80.6 cm³/rev]

| Flow (L/min) | Pressure (MPa) 3.5 | 7 | 10.5 | 14 | 17.5 | 20.5 (Max.cont.) | 22.5 (Max.int.) |
|---|---|---|---|---|---|---|---|
| 15 | 35 / **180** | 80 / **174** | 120 / **168** | 158 / **164** | 195 / **158** | 228 / **151** | 249 / **143** |
| 30 | 35 / **362** | 80 / **352** | 120 / **346** | 158 / **338** | 195 / **330** | 232 / **322** | 260 / **310** |
| 40 | 35 / **487** | 79 / **480** | 119 / **468** | 155 / **457** | 193 / **446** | 227 / **438** | 250 / **425** |
| 50 | 30 / **612** | 77 / **603** | 117 / **592** | 153 / **581** | 192 / **572** | 224 / **558** | 248 / **542** |
| 60 | 28 / **735** | 77 / **726** | 117 / **718** | 153 / **703** | 192 / **687** | 224 / **673** | 243 / **646** |
| 65 (Max.cont.) | 26 / **794** | 75 / **786** | 116 / **773** | 151 / **760** | 188 / **744** | 217 / **722** | 236 / **706** |
| 80 (Max.int.) | 24 / **981** | 72 / **968** | 109 / **955** | 142 / **925** | 176 / **893** | 206 / **870** | 227 / **832** |

### FPMSY 100 [100.8 cm³/rev]

| Flow (L/min) | Pressure (MPa) 3.5 | 7 | 10.5 | 14 | 17.5 | 20.5 (Max.cont.) | 22.5 (Max.int.) |
|---|---|---|---|---|---|---|---|
| 15 | 48 / **146** | 95 / **144** | 150 / **139** | 200 / **135** | 250 / **130** | 282 / **120** | 310 / **105** |
| 30 | 45 / **291** | 94 / **289** | 146 / **278** | 198 / **274** | 250 / **269** | 290 / **258** | 317 / **242** |
| 40 | 43 / **387** | 89 / **384** | 142 / **374** | 196 / **359** | 248 / **350** | 288 / **335** | 316 / **320** |
| 50 | 40 / **486** | 88 / **483** | 135 / **473** | 194 / **462** | 247 / **450** | 286 / **430** | 315 / **420** |
| 60 | 37 / **588** | 88 / **584** | 132 / **574** | 185 / **562** | 244 / **550** | 283 / **538** | 312 / **520** |
| 75 (Max.cont.) | 35 / **740** | 80 / **735** | 130 / **720** | 180 / **705** | 240 / **696** | 279 / **676** | 310 / **653** |
| 90 (Max.int.) | 30 / **850** | 75 / **840** | 124 / **810** | 170 / **787** | 236 / **770** | 271 / **750** | 303 / **747** |

### FPMSY 125 [125 cm³/rev]

| Flow (L/min) | Pressure (MPa) 3.5 | 7 | 10.5 | 14 | 17.5 | 20.5 (Max.cont.) | 22.5 (Max.int.) |
|---|---|---|---|---|---|---|---|
| 15 | 55 / **115** | 120 / **113** | 176 / **110** | 245 / **104** | 309 / **98** | 345 / **90** | 375 / **84** |
| 30 | 55 / **231** | 120 / **228** | 175 / **223** | 250 / **214** | 315 / **202** | 364 / **188** | 404 / **172** |
| 40 | 53 / **312** | 118 / **309** | 178 / **290** | 250 / **289** | 315 / **278** | 364 / **262** | 403 / **235** |
| 50 | 50 / **391** | 115 / **386** | 176 / **378** | 248 / **365** | 315 / **352** | 362 / **339** | 397 / **308** |
| 60 | 45 / **469** | 113 / **461** | 171 / **450** | 241 / **437** | 308 / **425** | 358 / **400** | 397 / **372** |
| 75 (Max.cont.) | 45 / **588** | 110 / **574** | 167 / **560** | 240 / **544** | 306 / **526** | 352 / **505** | 389 / **481** |
| 90 (Max.int.) | 40 / **710** | 105 / **696** | 162 / **680** | 237 / **661** | 301 / **646** | 343 / **628** | 378 / **610** |

TORQUE(N•m) 301
SPEED (r/min) **646**

### FPMSY 160 [154 cm³/rev]

| Flow (L/min) | Pressure (MPa) 3.5 | 7 | 10.5 | 14 | 17.5 | 21 (Max.cont.) | 22.5 (Max.int.) |
|---|---|---|---|---|---|---|---|
| 15 | 70 / **93** | 142 / **91** | 215 / **89** | 298 / **85** | 372 / **80** | 435 / **76** | 476 / **58** |
| 30 | 73 / **189** | 151 / **187** | 225 / **181** | 312 / **176** | 382 / **170** | 456 / **162** | 492 / **153** |
| 40 | 75 / **252** | 152 / **250** | 228 / **246** | 314 / **239** | 383 / **234** | 454 / **228** | 488 / **212** |
| 50 | 70 / **313** | 148 / **310** | 225 / **306** | 305 / **298** | 372 / **293** | 445 / **285** | 480 / **272** |
| 60 | 68 / **378** | 143 / **376** | 218 / **370** | 296 / **362** | 370 / **353** | 442 / **346** | 480 / **332** |
| 75 (Max.cont.) | 62 / **475** | 140 / **469** | 211 / **461** | 291 / **450** | 365 / **441** | 439 / **432** | 475 / **414** |
| 90 (Max.int.) | 59 / **567** | 131 / **561** | 202 / **554** | 286 / **543** | 357 / **532** | 425 / **520** | 460 / **509** |

cont.
int.

## FPMSY 200 [194 cm³/rev]

Pressure (MPa)

| Flow (L/min) | 3.5 | 7 | 10.5 | 14 | 17.5 | 21 (Max.cont.) | 22.5 (Max.int.) |
|---|---|---|---|---|---|---|---|
| 15 | 87 / **74** | 179 / **73** | 273 / **71** | 371 / **68** | 471 / **64** | 562 / **60** | 610 / **48** |
| 30 | 91 / **150** | 190 / **148** | 288 / **143** | 386 / **140** | 489 / **134** | 572 / **128** | 618 / **119** |
| 40 | 94 / **198** | 193 / **195** | 296 / **192** | 394 / **188** | 498 / **183** | 584 / **178** | 645 / **167** |
| 50 | 90 / **248** | 191 / **246** | 292 / **241** | 389 / **236** | 493 / **230** | 580 / **223** | 634 / **212** |
| 60 | 85 / **300** | 185 / **295** | 279 / **288** | 382 / **281** | 483 / **273** | 575 / **263** | 622 / **251** |
| 75 (Max.cont.) | 78 / **374** | 176 / **370** | 271 / **364** | 370 / **360** | 472 / **352** | 561 / **340** | 610 / **331** |
| 90 (Max.int.) | 68 / **443** | 163 / **440** | 265 / **435** | 361 / **428** | 456 / **424** | 545 / **413** | 599 / **400** |

## FPMSY 250 [243 cm³/rev]

Pressure (MPa)

| Flow (L/min) | 3.5 | 7 | 10.5 | 14 | 17.5 | 20 (Max.cont.) | 22.5 (Max.int.) |
|---|---|---|---|---|---|---|---|
| 15 | 110 / **59** | 231 / **58** | 351 / **56** | 462 / **53** | 585 / **50** | 681 / **46** | 778 / **35** |
| 30 | 116 / **119** | 236 / **117** | 359 / **114** | 475 / **108** | 597 / **102** | 700 / **92** | 790 / **80** |
| 40 | 118 / **162** | 241 / **159** | 363 / **156** | 480 / **150** | 599 / **143** | 706 / **134** | 796 / **121** |
| 50 | 111 / **203** | 234 / **201** | 352 / **197** | 472 / **191** | 591 / **182** | 693 / **173** | 788 / **158** |
| 60 | 106 / **244** | 224 / **242** | 345 / **237** | 462 / **230** | 582 / **220** | 685 / **208** | 772 / **194** |
| 75 (Max.cont.) | 101 / **303** | 214 / **299** | 340 / **294** | 454 / **285** | 570 / **272** | 670 / **260** | 760 / **244** |
| 90 (Max.int.) | 93 / **363** | 209 / **359** | 335 / **354** | 447 / **348** | 559 / **340** | 657 / **328** | 749 / **303** |

## FPMSY 315 [311 cm³/rev]

Pressure (MPa)

| Flow (L/min) | 3.5 | 7 | 10.5 | 14 | 17.5 | 20 (Max.cont.) | 22.5 (Max.int.) |
|---|---|---|---|---|---|---|---|
| 15 | 148 / **48** | 304 / **47** | 456 / **45** | 613 / **43** | 762 / **41** | 879 / **39** | 978 / **27** |
| 30 | 155 / **95** | 314 / **93** | 465 / **91** | 635 / **89** | 778 / **86** | 884 / **82** | 988 / **67** |
| 40 | 160 / **127** | 321 / **125** | 479 / **121** | 650 / **117** | 796 / **115** | 906 / **109** | 997 / **91** |
| 50 | 155 / **159** | 314 / **157** | 465 / **153** | 638 / **149** | 780 / **145** | 886 / **142** | 988 / **128** |
| 60 | 151 / **187** | 306 / **185** | 453 / **181** | 620 / **176** | 765 / **169** | 886 / **157** | 976 / **143** |
| 75 (Max.cont.) | 146 / **238** | 300 / **236** | 445 / **232** | 613 / **227** | 755 / **224** | 875 / **220** | 966 / **196** |
| 90 (Max.int.) | 135 / **286** | 284 / **283** | 436 / **278** | 601 / **272** | 740 / **265** | 863 / **257** | 952 / **232** |

## FPMSY 400 [394 cm³/rev]

Pressure (MPa)

| Flow (L/min) | 3.5 | 7 | 10.5 | 14 | 16 (Max.cont.) | 17.5 (Max.int.) |
|---|---|---|---|---|---|---|
| 15 | 186 / **37** | 379 / **36** | 578 / **35** | 779 / **33** | 896 / **31** | 986 / **29** |
| 30 | 190 / **75** | 388 / **73** | 590 / **71** | 791 / **68** | 905 / **65** | 991 / **61** |
| 40 | 195 / **99** | 394 / **97** | 596 / **95** | 797 / **93** | 912 / **90** | 998 / **85** |
| 50 | 191 / **125** | 388 / **123** | 587 / **118** | 785 / **114** | 904 / **109** | 983 / **102** |
| 60 | 186 / **149** | 388 / **146** | 587 / **142** | 785 / **137** | 904 / **131** | 983 / **122** |
| 75 (Max.cont.) | 181 / **187** | 372 / **183** | 576 / **177** | 770 / **171** | 891 / **164** | 973 / **153** |
| 90 (Max.int.) | 176 / **226** | 367 / **221** | 571 / **214** | 766 / **208** | 883 / **199** | 965 / **183** |

TORQUE (N•m) 766
SPEED (rpm) **208**

## FPMSY 475 [475 cm³/rev]

Pressure (MPa)

| Flow (L/min) | 3.5 | 7 | 10.5 | 14 (Max.cont.) | 15 (Max.int.) |
|---|---|---|---|---|---|
| 15 | 218<br>**30** | 439<br>**29** | 661<br>**28** | 892<br>**27** | 995<br>**25** |
| 30 | 223<br>**61** | 450<br>**60** | 676<br>**58** | 910<br>**56** | 1002<br>**53** |
| 40 | 228<br>**82** | 461<br>**80** | 689<br>**77** | 927<br>**74** | 1017<br>**68** |
| 50 | 224<br>**103** | 456<br>**101** | 682<br>**97** | 920<br>**92** | 1008<br>**86** |
| 60 | 220<br>**123** | 451<br>**121** | 677<br>**118** | 913<br>**112** | 998<br>**105** |
| Max.cont. 75 | 212<br>**155** | 443<br>**153** | 664<br>**147** | 901<br>**140** | 980<br>**132** |
| Max.int. 90 | 196<br>**186** | 421<br>**184** | 643<br>**178** | 877<br>**170** | 959<br>**157** |

cont.

int.

# FPMSY - DIMENSIONS AND MOUNTING DATA

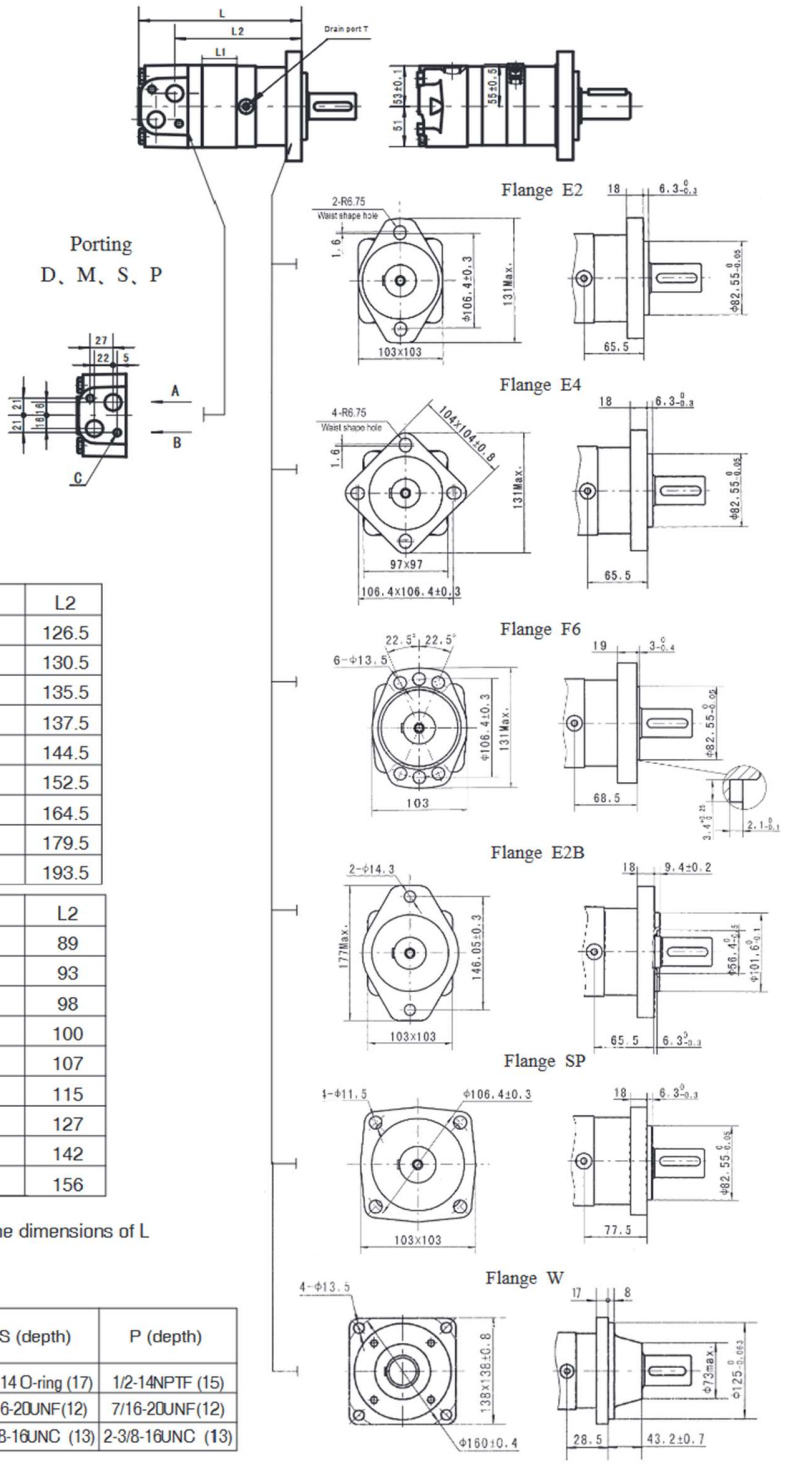


| Model | L | L1 | L2 |
|---|---|---|---|
| BMSY-80 | 170 | 16 | 126.5 |
| BMSY-100 | 174 | 20 | 130.5 |
| BMSY-125 | 179 | 25 | 135.5 |
| BMSY-160 | 181 | 27 | 137.5 |
| BMSY-200 | 188 | 34 | 144.5 |
| BMSY-250 | 196 | 42 | 152.5 |
| BMSY-315 | 208 | 54 | 164.5 |
| BMSY-400 | 223 | 69 | 179.5 |
| BMSY-475 | 237 | 83 | 193.5 |

| Model | L | L1 | L2 |
|---|---|---|---|
| BMSY-80-W | 132.5 | 16 | 89 |
| BMSY-100-W | 136.5 | 20 | 93 |
| BMSY-125-W | 141.5 | 25 | 98 |
| BMSY-160-W | 143.5 | 27 | 100 |
| BMSY-200-W | 150.5 | 34 | 107 |
| BMSY-250-W | 158.5 | 42 | 115 |
| BMSY-315-W | 170.5 | 54 | 127 |
| BMSY-400-W | 185.5 | 69 | 142 |
| BMSY-475-W | 199.5 | 83 | 156 |

Note:If the mounting SP is used,the dimensions of L and L2 should plus 12mm.

| Code / Mounting | D (depth) | M (depth) | S (depth) | P (depth) |
|---|---|---|---|---|
| P(A,B) | G1/2(15) | M22x1.5(15) | 7/8-14 O-ring (17) | 1/2-14NPTF (15) |
| T | G1/4(12) | M14x1.5(12) | 7/16-20UNF(12) | 7/16-20UNF(12) |
| C | 2-M10(13) | 2-M10 (13) | 2-3/8-16UNC (13) | 2-3/8-16UNC (13) |

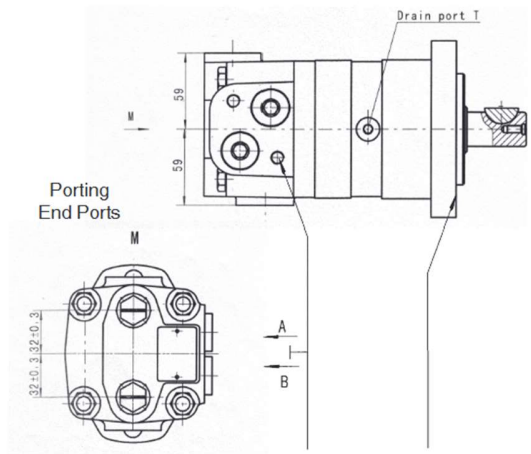


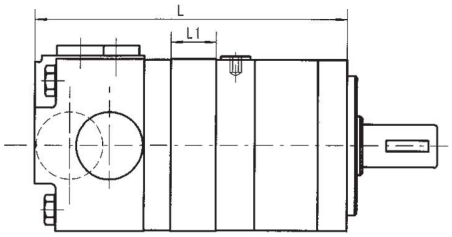


| Code<br>Mounting | EE-D<br>(depth) | EE-M2<br>(depth) | EE-S2<br>(depth) |
|---|---|---|---|
| P(A,B) | G1/2<br>(15) | M22 x<br>1.5 (15) | 7/8-14 O-<br>ring (17) |
| T | G1/4<br>(12) | M14 x 1.5<br>(12) | 7/16-<br>20UNF(12) |

End Ports P(A\ B)

| Model | L | L1 |
|---|---|---|
| BMSY-80 | 176 | 16 |
| BMSY-100 | 180 | 20 |
| BMSY-125 | 185 | 25 |
| BMSY-160 | 187 | 27 |
| BMSY-200 | 194 | 34 |
| BMSY-250 | 202 | 42 |
| BMSY-315 | 214 | 54 |
| BMSY-400 | 229 | 69 |
| BMSY-475 | 243 | 83 |

| Model | L | L1 |
|---|---|---|
| BMSY-80-WE | 148 | 16 |
| BMSY-100-WE | 152 | 20 |
| BMSY-125-WE | 157 | 25 |
| BMSY-160-WE | 159 | 27 |
| BMSY-200-WE | 166 | 34 |
| BMSY-250-WE | 174 | 42 |
| BMSY-315-WE | 186 | 54 |
| BMSY-400-WE | 201 | 69 |
| BMSY-475-WE | 215 | 83 |

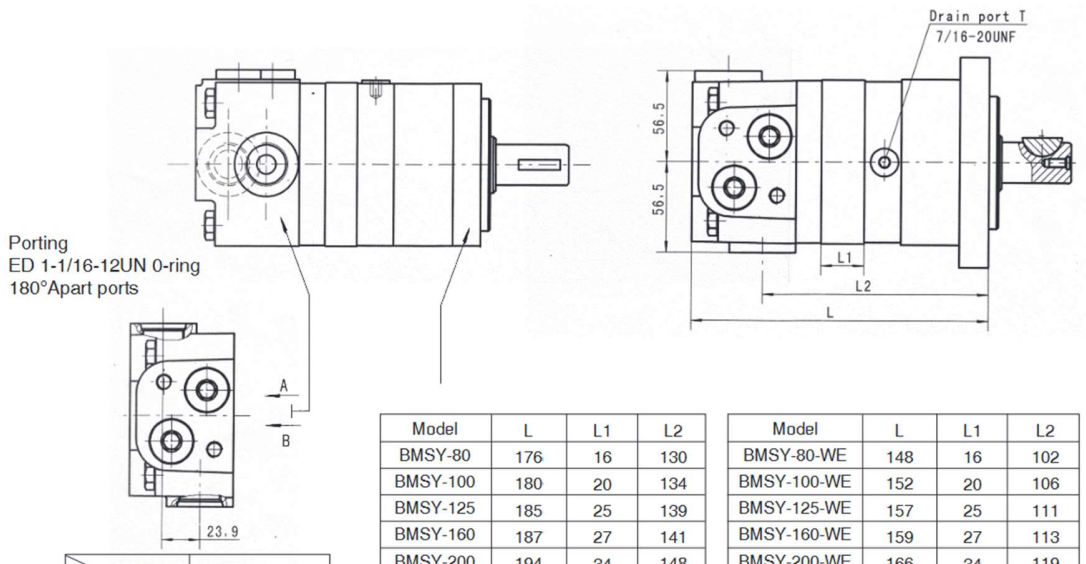


| Code / Mounting | ED (depth) |
|---|---|
| P(A,B) | 1-1/16-12UN (18) |
| T | 7/16-20UNF (12) |

| Model | L | L1 | L2 |
|---|---|---|---|
| BMSY-80 | 176 | 16 | 130 |
| BMSY-100 | 180 | 20 | 134 |
| BMSY-125 | 185 | 25 | 139 |
| BMSY-160 | 187 | 27 | 141 |
| BMSY-200 | 194 | 34 | 148 |
| BMSY-250 | 202 | 42 | 156 |
| BMSY-315 | 214 | 54 | 168 |
| BMSY-400 | 229 | 69 | 183 |
| BMSY-475 | 243 | 83 | 197 |

| Model | L | L1 | L2 |
|---|---|---|---|
| BMSY-80-WE | 148 | 16 | 102 |
| BMSY-100-WE | 152 | 20 | 106 |
| BMSY-125-WE | 157 | 25 | 111 |
| BMSY-160-WE | 159 | 27 | 113 |
| BMSY-200-WE | 166 | 34 | 119 |
| BMSY-250-WE | 178 | 42 | 127 |
| BMSY-315-WE | 190 | 54 | 139 |
| BMSY-400-WE | 205 | 69 | 154 |
| BMSY-475-WE | 219 | 83 | 168 |

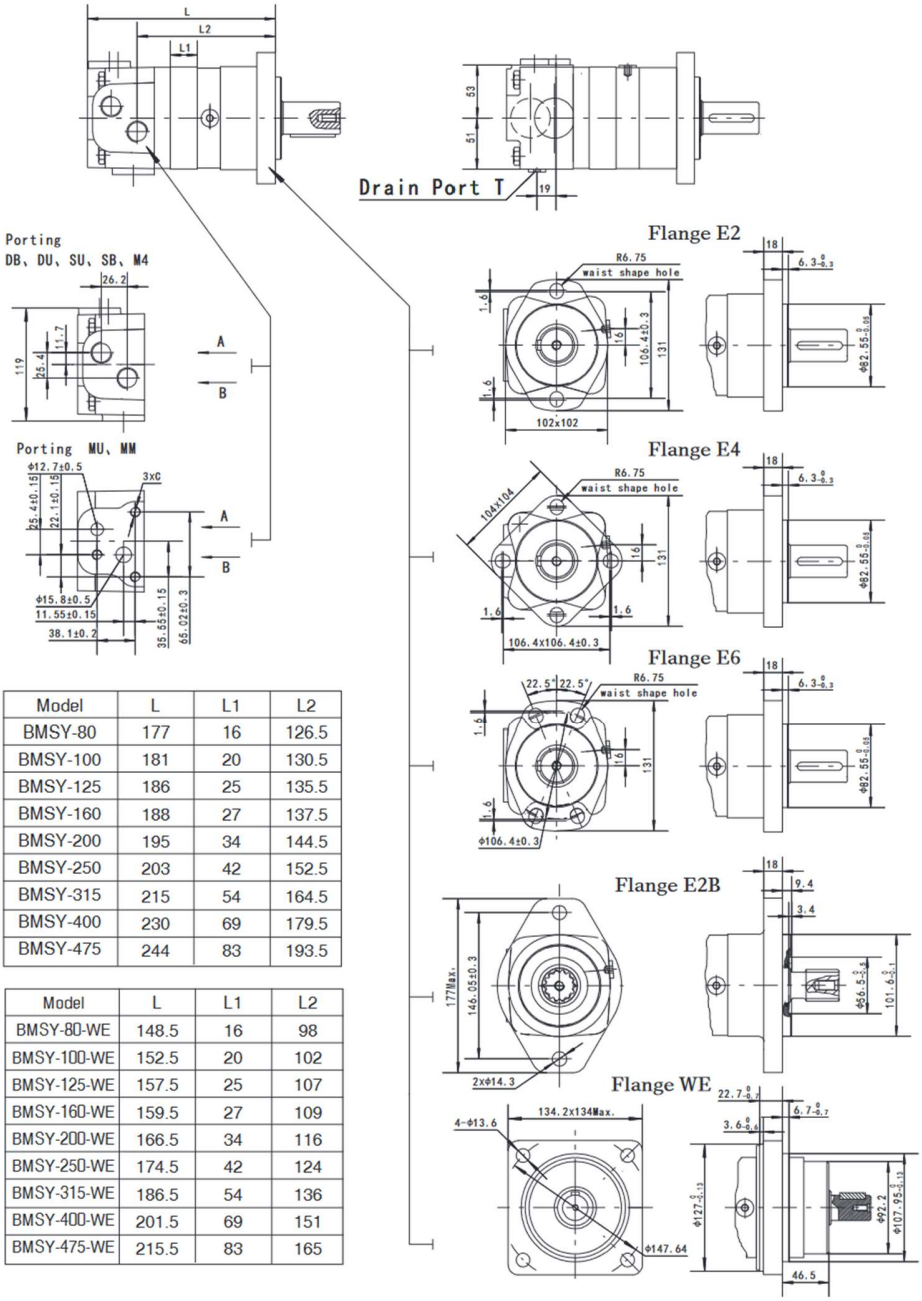


| Model | L | L1 | L2 |
|---|---|---|---|
| BMSY-80 | 177 | 16 | 126.5 |
| BMSY-100 | 181 | 20 | 130.5 |
| BMSY-125 | 186 | 25 | 135.5 |
| BMSY-160 | 188 | 27 | 137.5 |
| BMSY-200 | 195 | 34 | 144.5 |
| BMSY-250 | 203 | 42 | 152.5 |
| BMSY-315 | 215 | 54 | 164.5 |
| BMSY-400 | 230 | 69 | 179.5 |
| BMSY-475 | 244 | 83 | 193.5 |

| Model | L | L1 | L2 |
|---|---|---|---|
| BMSY-80-WE | 148.5 | 16 | 98 |
| BMSY-100-WE | 152.5 | 20 | 102 |
| BMSY-125-WE | 157.5 | 25 | 107 |
| BMSY-160-WE | 159.5 | 27 | 109 |
| BMSY-200-WE | 166.5 | 34 | 116 |
| BMSY-250-WE | 174.5 | 42 | 124 |
| BMSY-315-WE | 186.5 | 54 | 136 |
| BMSY-400-WE | 201.5 | 69 | 151 |
| BMSY-475-WE | 215.5 | 83 | 165 |

| Mounting \ Code | DB(depth) | DU (depth) | SU (depth) | SB (depth) | M4 (depth) | MU | MM |
|---|---|---|---|---|---|---|---|
| P(A,B) | G1/2(15) | G1/2(15) | 7/8-14O-ring(17) | 7/8-14O-ring(17) | M22x1.5(15) | Φ12.7,Φ15.8 | Φ12.7,Φ15.8 |
| T | G1/4(12) | 7/16-20UNF(12) | 7/16-20UNF(12) | G1/4(12) | M14x1.5(12) | 7/16-20UNF(12) | G1/4(12) |
| C | - | | | | | 3/8-16UNC | M10 |

Porting
D、M、S、P

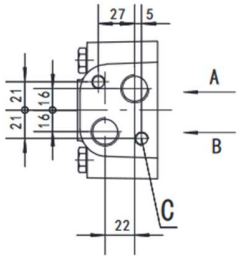


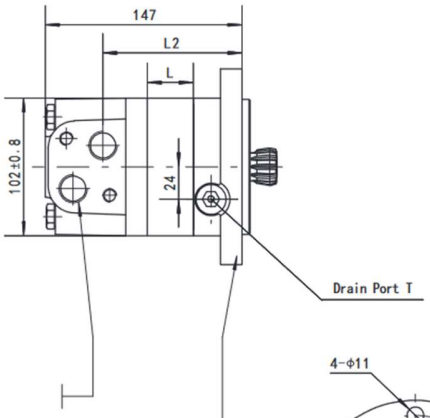


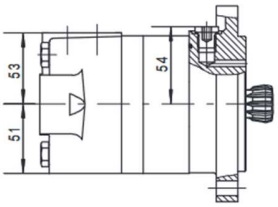


Flange D

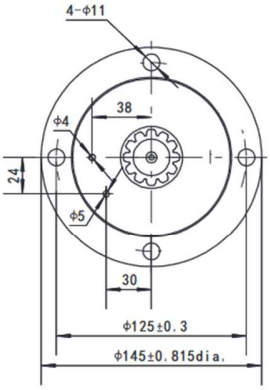


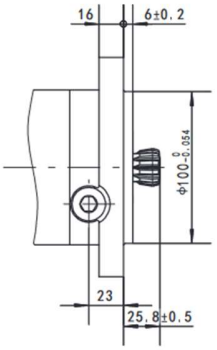


Flange E

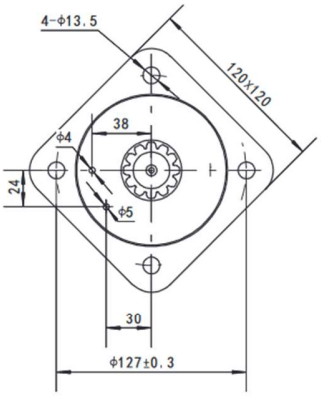


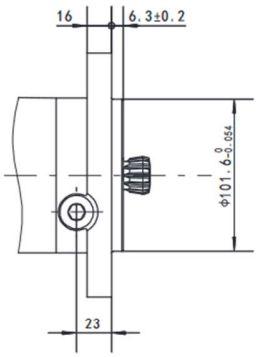


| Model | L | L1 | L2 |
|---|---|---|---|
| BMSYS-80 | 129 | 16 | 85 |
| BMSYS-100 | 133 | 20 | 89 |
| BMSYS-125 | 138 | 25 | 94 |
| BMSYS-160 | 140 | 27 | 96 |
| BMSYS-200 | 147 | 34 | 103 |
| BMSYS-250 | 155 | 42 | 111 |
| BMSYS-315 | 167 | 54 | 123 |
| BMSYS-400 | 182 | 69 | 138 |
| BMSYS-475 | 196 | 83 | 152 |

| Code / Mounting | D (depth) | M (depth) | S (depth) | P (depth) |
|---|---|---|---|---|
| P(A,B) | G1/2(15) | M22x1.5(15) | 7/8-14O-ring(17) | 1/2-14NPTF(15) |
| T | G1/4(12) | M14x1.5(12) | 7/16-20UNF(12) | 7/16-20UNF(12) |
| C | 2-M10(13) | 2-M10(13) | 2-3/8-16UNC(13) | 2-3/8-16UNC(13) |

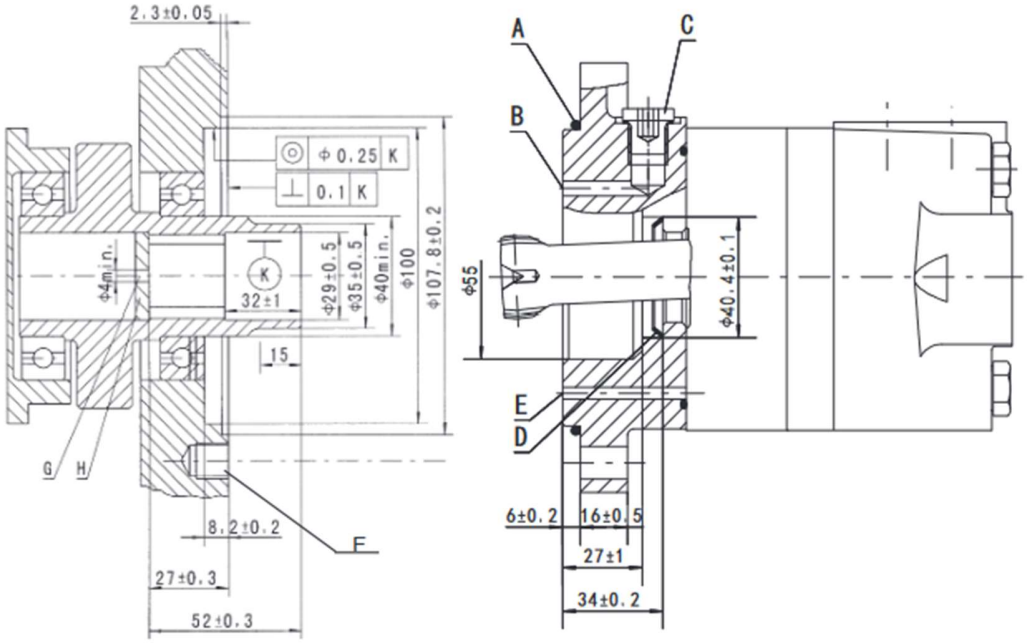


A: O-ring:100x3
B: External drain channel
C: Drain connection G 1/4;12 mm deep
D: Conical seal ring
E: Internal drain channel
F: M10; min. 15mm deep
G: Oil circulation hole
H: Hardened stop plate

## *INTERNAL SPLINE DATA FOR THE ATTACHED COMPONENT*

| *Fillet Root Side Fit* | | *mm* |
|---|---|---|
| Number of Teeth | Z | 12 |
| Diametral Pitch | DP | 12/24 |
| Pressure Angle | D | 30° |
| Pitch Dia. | D | ø25.4 |
| Major Dia. | Dei | $ø28^{0}_{-0.1}$ |
| Minor Dia. | Dii | $ø23^{+0.033}_{0}$ |
| Space Width Circular | E | 4.308±0.02 |

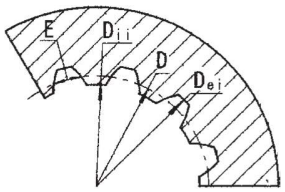


Hardering Specification: HRC 62±2
Effective case depth 0.7±0.2

# SHAFT EXTENSIONS FOR FPMSY MOTORS

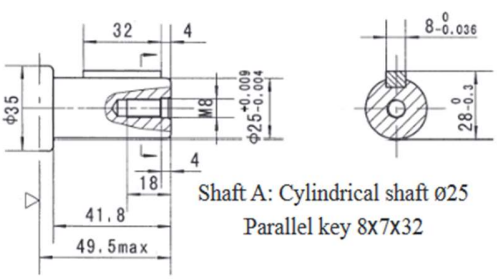


Shaft A: Cylindrical shaft ø25
Parallel key 8X7X32

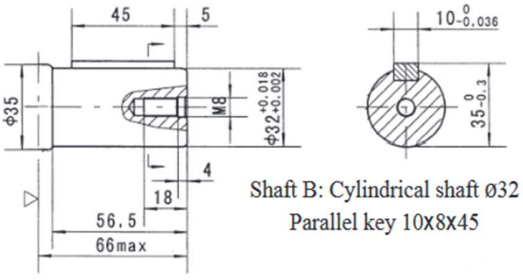


Shaft B: Cylindrical shaft ø32
Parallel key 10X8X45

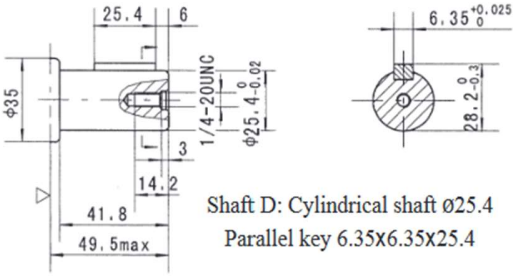


Shaft D: Cylindrical shaft ø25.4
Parallel key 6.35X6.35X25.4

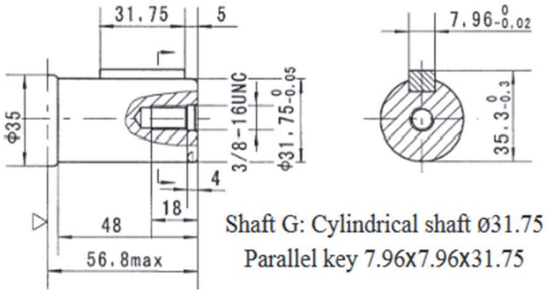


Shaft G: Cylindrical shaft ø31.75
Parallel key 7.96X7.96X31.75

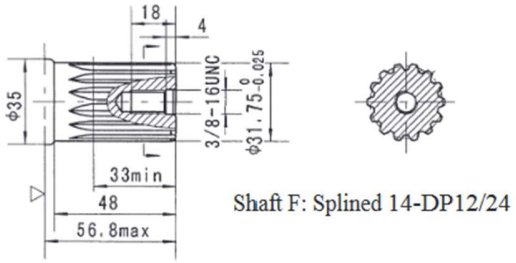


Shaft F: Splined 14-DP12/24

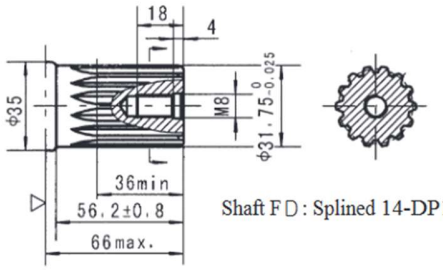


Shaft FD: Splined 14-DP12/24

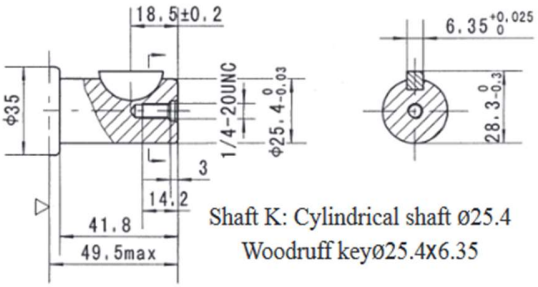


Shaft K: Cylindrical shaft ø25.4
Woodruff keyø25.4X6.35

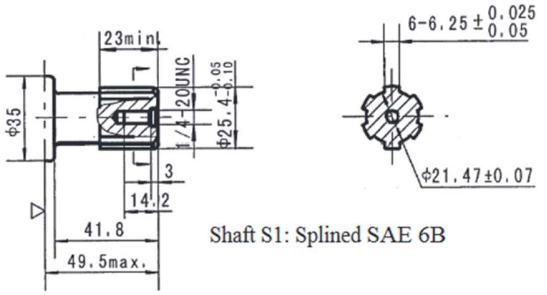


Shaft S1: Splined SAE 6B

▷ Motor Mounting Surface (Dimension corresponding mounting E2, by analogy with others)

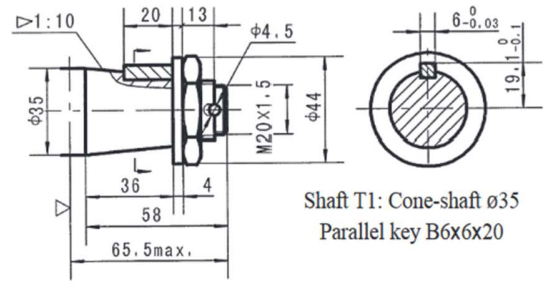


Shaft T1: Cone-shaft ø35
Parallel key B6x6x20

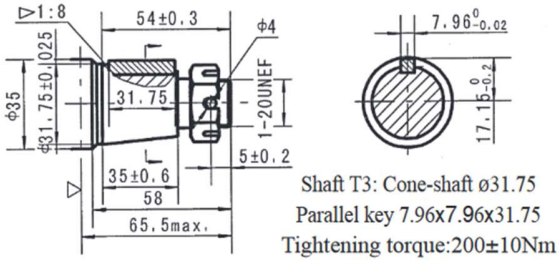


Shaft T3: Cone-shaft ø31.75
Parallel key 7.96x7.96x31.75
Tightening torque:200±10Nm

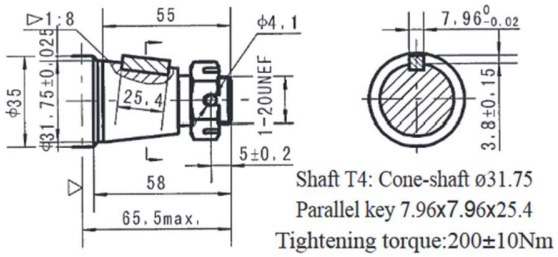


Shaft T4: Cone-shaft ø31.75
Parallel key 7.96x7.96x25.4
Tightening torque:200±10Nm

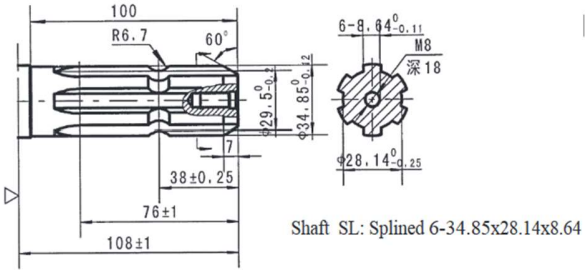


Shaft SL: Splined 6-34.85x28.14x8.64

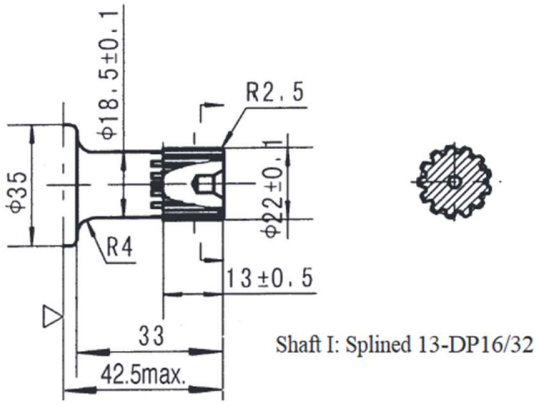


Shaft I: Splined 13-DP16/32

▷ Motor Mounting Surface (Dimension corresponding mounting E2, by analogy with others) Note: Mounting SP is the same with shaft model T1、D、B、F and G.

## *Permissible shaft seal pressure*

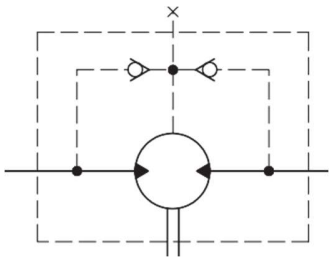

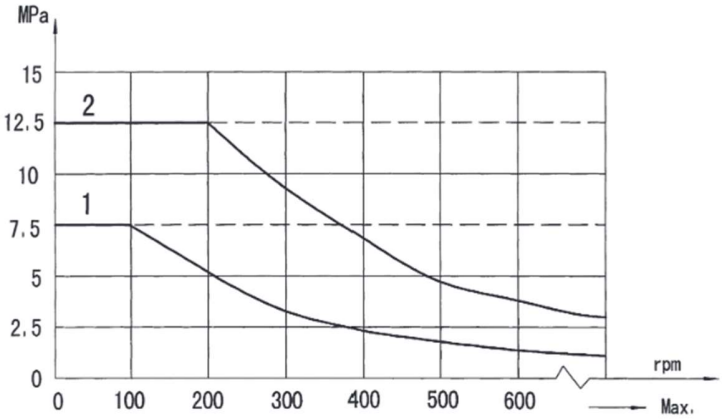


Note:1.Chart for standard shaft seal;
2.Chart for high pressure shaft seal.

## *Standard direction of shaft rotation: Standard*

When facing shaft end of motor, shaft to rotate:

- Clockwise when port "A" is pressurized.

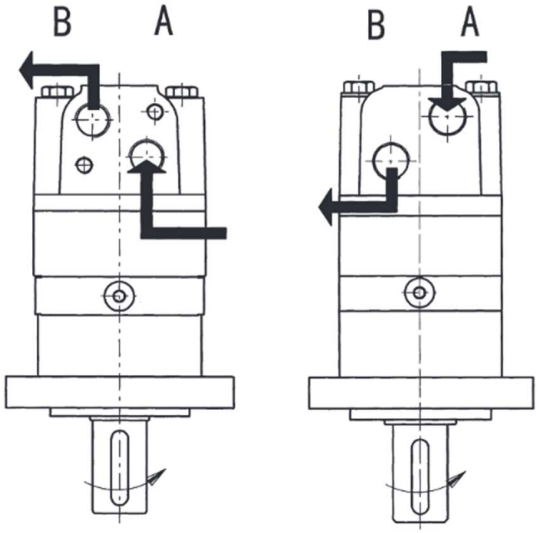


In applications without drain line, output shaft seal exceeds a bit of the pressure in the return line. When applications use the drain line, the pressure of output shaft seal equals the pressure in drain line.

## Oil flow in drain line

The table shows the Max. oil flow in the drain line at a return pressure less than 0.5-1 MPa.

| *Pressure drop (MPa)* | *Viscosity (mm²/s)* | *Oil flow in the drain line (L/min.)* |
|---|---|---|
| 14 | 20 | 1.5 |
| | 35 | 1 |
| 21 | 20 | 3 |
| | 35 | 2 |

## Axial and radial forces

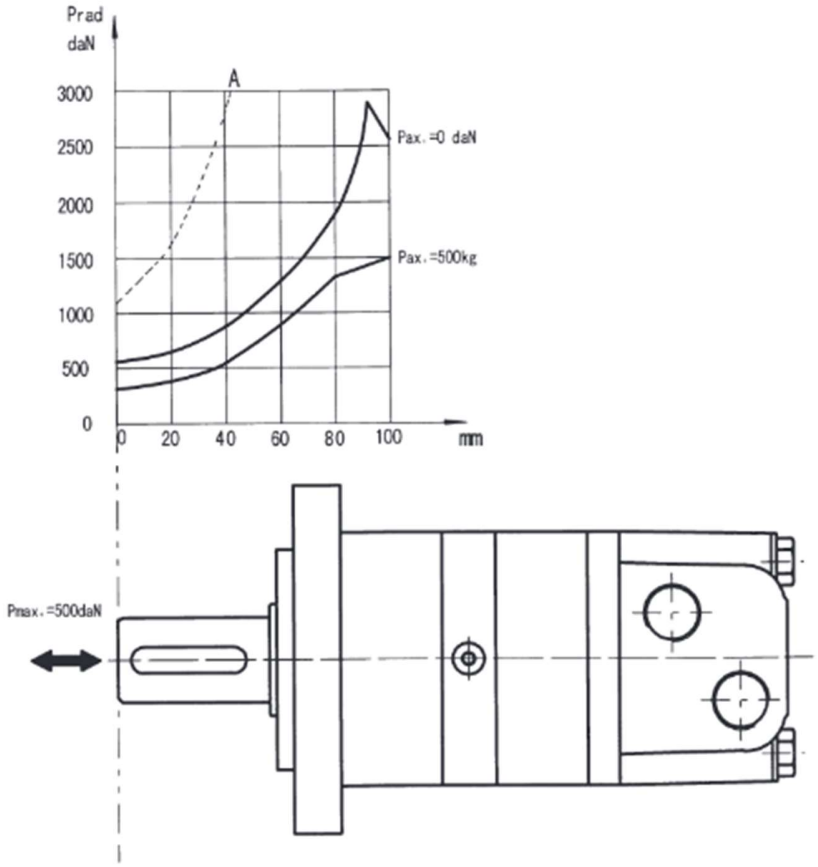


The output shaft runs in tapered bearings that permit high axial and radial forces, Curve "A" shows max radial shaft load. Any shaft loads exceeding the values quoted in the curve will involve a risk of breakage. The two other curves apply to a B10 bearing life of 3000 hours at 200 RPM.

# Order Information

## Order Information

FPMSY 1 – 2 – 3 – 4 – 5 – 6 – 7 – 8

| Pos.1 | 2 | 3 | | 4 | | 5 | | 6 | | 7 | | 8 |
|---|---|---|---|---|---|---|---|---|---|---|---|---|
| Code | Disp. | Flange | | Output Shaft | | Port and Drain Port | | Rotation Direction | | Paint | | Unusually Function |
| Omit | 80 | E2 | 2-□13.5 Rhomb-flange Ø106.4, pilot Ø82.5x6.3 | B | Shaft Ø 32 , parilel key 10x8x45 | EE-D | G1/2, G1/4 | Omit | Standard | 00 | No paint | |
| | 100 | E4 | 4-Ø13.5 Rhomb-flange Ø106.4, pilot Ø82.5x6.3 | D | Shaft Ø 25.4 , parilel key6.35x6.35x25.4 | EE-M | 2M22x1.5, M14x1.5 | | | | | |
| | 125 | F6 | 6-Ø13.5 Rhomb-flange Ø106.4, pilot Ø82.5x2.6 | G | Shaft Ø 31.75 , parilel key 7.96x7.96x31.75 | EE-S2 | 7/8-14UNF O-ring, 7/16-20 UNF | Omit | Standard | Omit | Blue | Omit |
| | 160 | W | 4-Ø13.5 Wheel-flange Ø160 , pilot Ø125x8 | F | Shaft Ø 31.75 , splined key 14-DP12/24 | ED | 1-1/16-12UN O-ring, 7/16-20 UNF | | | | | |
| | 200 | E2B | 2-Ø14.3 Rhomb-flange Ø146.05, pilot Ø101.6x9.4 | FD | Long Shaft Ø31.75 , splined key 14-DP12/24 | DB | G1/2, G1/4 | | | | | |
| | 250 | SP | 4-Ø11.5 Square-flange Ø106.4 pilot Ø82.5x6.3 | M | M22x1.5 Manifold Mount 2-M10 , M14x1.5 | DU | G1/2, 7/16-20 UNF | | | | | |
| | 315 | | | SL | shaft Ø34.85,Splined key 6-34.85x28.14x8.64 | SB | 7/8-14UNF O-ring, G1/4 | | | | | |
| | 400 | | | S | 7/8-14UNF O-ring manifold 2-3/8-16 , 7/16-20UNF | SU | 7/8-14UNF O-ring, 7/16-20 UNF | | | | | |
| | 475 | | | T1 | Cone-shaft Ø35 ,parilel key B6x6x20 | M4 | M22x1.5, M14x1.5 | | | | | |
| | | | | T3 | Cone-shaft Ø 31.75 , parilel key 7.96x7.96x31.75 | MU | 1/2" 5/8"Crosshole Manifold 3x3/8-16UNC,7/16-20UNF | | | | | |
| | | | | P | 1/2-14NPTF manifold 2-3/8-16UNC , 7/16-20UNF | MM | 1/2", 5/8"Crosshole Manifold 3xM10,G1/4 | | | | | |
| | | | | S1 | Shaft Ø25.4 ,splined key SAE 6B | G | G1/2, G1/4 | | | | | |
| | | | | I | Sub-shaft Ø22 , splined key 13-DP16/32 | M2 | M22x1.5, M14x1.5 | | | | | |
| S | | D | 4-Ø11 Circle-flange Ø125 , pilot Ø100x6 | | | S2 | 7/8-14UNF O-ring, 7/16-20 UNF | | | | | |
| | | E | 4-Ø13.5Circle-flange Ø127, pilot Ø101.6x6.3 | Omit | Short shaft 12-DP12/24 | | | | | | | |

| Pos.1 | 2 | 3 | | 4 | | 5 | | 6 | | 7 | | 8 |
|---|---|---|---|---|---|---|---|---|---|---|---|---|
| Code | Disp. | Flange | | Output Shaft | | Port and Drain Port | | Rotation Direction | | Paint | | Unusually Function |
| Omit | 80 | E2 | 2-Ø13.5 Rhomb-flange Ø106.4, pilot Ø82.5x6.3 | A | Shaft Ø25 , parilel key 8x7x32 | EE-D | G1/2, G1/4 | Omit | Standard | 00 | No paint | |
| | 100 | | | B | Shaft Ø32 , parilel key 10x8x45 | EE-M | 2M22x1.5, M14x1.5 | | | | | |
| | 125 | | | K | Shaft Ø25.4, Woodruff key Ø25.4x6.35 | EE-S2 | 7/8-14UNF O-ring, 7/16-20 UNF | | | | | |
| | 160 | E4 | 4-Ø13.5 Rhomb-flange Ø106.4, pilot Ø82.5x6.3 | G | Shaft Ø31.75 , parilel key 7.96x7.96x31.75 | ED | 1-1/16-12UN O-ring, 7/16-20 UNF | | | | | |
| | 200 | | | F | Shaft Ø31.75 , splined key 14-DP12/24 | DB | G1/2, G1/4 | | | | | |
| | 250 | E6 | 6-Ø13.5 Rhomb-flange Ø106.4, pilot Ø82.5x6.3 | FE | Shaft Ø31.75 , splined key 14-DP12/24 | DU | G1/2, 7/16-20 UNF | | | | | |
| | 315 | | | T4 | Cone-shaft Ø31.75 , parilel key 7.96x7.96x25.4 | SB | 7/8-14UNF O-ring, G1/4 | | | | | |
| | 400 | E2B | 2-Ø14.3 Rhomb-flange Ø146.05, pilot Ø101.6x9.4 | S1 | Shaft Ø25.4 ,splined key SAE 6B | SU | 7/8-14UNF O-ring, 7/16-20 UNF | Omit | Standard | Omit | Blue | Omit |
| | 475 | WE | 4-Ø13.6Wheel-flange Ø147.6, pilot Ø107.95x6.4 | I | Sub-shaft Ø21.74 , splined key 13-DP16/32 | M4 | M22x1.5, M14x1.5 | | | | | |
| | | | | | | MU | 1/2" 5/8"Crosshole Manifold 3x3/8-16UNC,7/16-20UNF | | | | | |
| | | | | | | MM | 1/2", 5/8"Crosshole Manifold 3xM10,G1/4 | | | | | |
| | | | | | | G | G1/2, G1/4 | | | | | |
| | | | | | | M2 | M22x1.5, M14x1.5 | | | | | |
| | | | | | | S2 | 7/8-14UNF O-ring, 7/16-20 UNF | | | | | |

Note:When the table is used, please fill the code of left rows in the table and give us, which the code information is consists of construction, displacement, mounting flange, output shaft and ports.The informations of mounting flange,output shaft and fronts are the same as BMS serier.The SP flange affiles to shafts of T1、D、B、F、G. If the specification is not in the table or you have specific requirements, please contact us.

# FPMT SERIES HYDRAULIC MOTOR

FPMT series motor adapt the advanced Geroler gear set design with disc distribution flow and high pressure. The unit can be supplied the individual variant in operating multifunction in accordance with requirement of applications.

*Characteristic features:*

- Advanced manufacturing devices for the Geroler gear set, which use low pressure of start-up, provide smooth and reliable operation and high efficiency.
- The output shaft adapts in tapered roller bearings that permit high axial and radial forces can offer capacities of high pressure and high torque in the wide of applications.
- Advanced design in disc distribution flow, which can automatically compensate in operating with high volume efficiency and long life, provide smooth and reliable operation.

## *Main Specification*

| *Type* | | *FPMT 160* | *FPMT 200* | *FPMT 230* | *FPMT 250* | *FPMT 315* | *FPMT 400* | *FPMT 500* | *FPMT 630* | *FPMT 800* |
|---|---|---|---|---|---|---|---|---|---|---|
| displacement (cm³/rev) | | 161.1 | 201.4 | 232.5 | 251.8 | 326.3 | 410.9 | 523.6 | 629.1 | 801.8 |
| Max. speed (rpm) | cont. | 625 | 625 | 536 | 500 | 380 | 305 | 240 | 196 | 154 |
| | int. | 780 | 750 | 643 | 600 | 460 | 365 | 285 | 233 | 185 |
| Max. torque (Nm) | cont. | 470 | 590 | 670 | 730 | 950 | 1080 | 1220 | 1318 | 1464 |
| | int. | 560 | 710 | 821 | 880 | 1140 | 1260 | 1370 | 1498 | 1520 |
| | peak | 669 | 838 | 958 | 1036 | 1346.3 | 1450.3 | 1643.8 | 1618.8 | 1665 |
| Max. output (kW) | cont. | 27.7 | 34.9 | 34.7 | 34.5 | 34.9 | 31.2 | 28.8 | 25.3 | 22.2 |
| | int. | 32 | 40 | 40 | 40 | 40 | 35 | 35 | 27.5 | 26.8 |
| Max. pressure drop (MPa) | cont. | 20 | 20 | 20 | 20 | 20 | 18 | 16 | 14 | 12.5 |
| | int. | 24 | 24 | 24 | 24 | 24 | 21 | 18 | 16 | 13 |
| | peak | 28 | 28 | 28 | 28 | 28 | 24 | 21 | 19 | 16 |
| Max. flow (L/min) | cont. | 100 | 125 | 125 | 125 | 125 | 125 | 125 | 125 | 125 |
| | int. | 125 | 150 | 150 | 150 | 150 | 150 | 150 | 150 | 150 |
| Max. inlet Pressure (MPa) | cont. | 21 | 21 | 21 | 21 | 21 | 21 | 21 | 21 | 21 |
| | int. | 25 | 25 | 25 | 25 | 25 | 25 | 25 | 25 | 25 |
| | peak | 30 | 30 | 30 | 30 | 30 | 30 | 30 | 30 | 30 |
| Weight (kg) | | 19.5 | 20 | 20.4 | 20.5 | 21 | 22 | 23 | 24 | 25 |

- Continuous pressure: Max. value of operating motor continuously.
- Intermittent pressure: Max. value of operating motor in 6 seconds per minute.
- Peak pressure: Max. value of operating motor in 0.6 second per minute

## *Performance Data*

### FPMT 160 [161.1 cm³/rev]

| Flow (L/min) \ Pressure (MPa) | 4 | 8 | 10 | 12 | 16 | 20 | 24 |
|---|---|---|---|---|---|---|---|
| 10 | 88 / **60** | 176 / **59** | 228 / **58** | 275 / **56** | 361 / **54** | 447 / **50** | 535 / **44** |
| 20 | 89 / **121** | 181 / **120** | 234 / **117** | 277 / **114** | 372 / **109** | 459 / **103** | 557 / **95** |
| 40 | 91 / **249** | 180 / **246** | 235 / **243** | 277 / **236** | 381 / **230** | 471 / **223** | 573 / **212** |
| 60 | 82 / **371** | 178 / **367** | 235 / **362** | 277 / **356** | 381 / **349** | 470 / **340** | 572 / **330** |
| 80 | 78 / **492** | 173 / **489** | 229 / **485** | 276 / **478** | 379 / **470** | 466 / **462** | 567 / **447** |
| Max.cont. 100 | 70 / **614** | 160 / **611** | 218 / **606** | 269 / **598** | 370 / **590** | 455 / **582** | 558 / **570** |
| Max.int. 125 | 58 / **770** | 148 / **764** | 211 / **758** | 261 / **750** | 359 / **741** | 448 / **731** | 552 / **715** |

Max.cont. Max.int.

### FPMT 200 [201.4 cm³/rev]

| Flow (L/min) \ Pressure (MPa) | 4 | 8 | 10 | 12 | 16 | 20 | 24 |
|---|---|---|---|---|---|---|---|
| 10 | 124 / **47** | 233 / **46** | 289 / **45** | 340 / **42** | 454 / **39** | 560 / **37** | 669 / **33** |
| 20 | 125 / **95** | 239 / **94** | 298 / **92** | 347 / **90** | 468 / **87** | 576 / **84** | 696 / **75** |
| 40 | 120 / **195** | 241 / **193** | 296 / **191** | 352 / **187** | 475 / **183** | 589 / **178** | 716 / **167** |
| 60 | 116 / **297** | 237 / **295** | 295 / **292** | 352 / **287** | 478 / **282** | 589 / **276** | 718 / **263** |
| 80 | 108 / **395** | 231 / **393** | 289 / **389** | 350 / **384** | 474 / **377** | 586 / **370** | 716 / **359** |
| 100 | 99 / **493** | 227 / **490** | 286 / **486** | 344 / **482** | 471 / **475** | 580 / **467** | 712 / **460** |
| ax.cont. 125 | 84 / **615** | 208 / **611** | 276 / **607** | 333 / **602** | 459 / **595** | 566 / **588** | 697 / **572** |
| Max.int. 150 | 70 / **743** | 194 / **740** | 260 / **735** | 324 / **727** | 447 / **717** | 554 / **706** | 682 / **682** |

### FPMT 250 [251.8 cm³/rev]

| Flow (L/min) \ Pressure (MPa) | 4 | 8 | 10 | 12 | 16 | 20 | 24 |
|---|---|---|---|---|---|---|---|
| 10 | 138 / **38** | 286 / **38** | 355 / **37** | 419 / **36** | 559 / **34** | 689 / **32** | 824 / **31** |
| 20 | 143 / **76** | 296 / **75** | 364 / **74** | 432 / **72** | 580 / **70** | 708 / **67** | 853 / **62** |
| 40 | 139 / **156** | 301 / **154** | 372 / **152** | 440 / **149** | 593 / **146** | 723 / **142** | 884 / **134** |
| 60 | 132 / **237** | 294 / **236** | 372 / **233** | 441 / **229** | 592 / **224** | 727 / **219** | 888 / **207** |
| 80 | 128 / **317** | 283 / **316** | 364 / **314** | 433 / **308** | 587 / **303** | 721 / **299** | 887 / **284** |
| 100 | 126 / **396** | 282 / **394** | 355 / **391** | 427 / **387** | 582 / **381** | 716 / **373** | 879 / **359** |
| Max.cont. 125 | 116 / **495** | 260 / **492** | 340 / **488** | 414 / **483** | 568 / **476** | 703 / **469** | 864 / **454** |
| Max.int. 150 | 88 / **592** | 242 / **589** | 320 / **585** | 397 / **580** | 552 / **572** | 686 / **565** | 847 / **545** |

Max.cont. Max.int.

Torque (N•m) 552
Speed (rpm) **572**

### FPMT 315 [326.3 cm³/rev]

| Flow (L/min) \ Pressure (MPa) | 4 | 8 | 10 | 12 | 16 | 20 | 24 |
|---|---|---|---|---|---|---|---|
| 10 | 184 / **30** | 363 / **29** | 453 / **28** | 545 / **27** | 734 / **26** | 891 / **25** | 1062 / **23** |
| 20 | 189 / **60** | 380 / **59** | 472 / **58** | 562 / **56** | 757 / **54** | 917 / **52** | 1109 / **50** |
| 40 | 191 / **121** | 381 / **120** | 484 / **118** | 570 / **115** | 774 / **112** | 954 / **109** | 1149 / **104** |
| 60 | 189 / **183** | 376 / **181** | 493 / **179** | 573 / **175** | 772 / **172** | 962 / **168** | 1154 / **158** |
| 80 | 179 / **244** | 369 / **242** | 479 / **239** | 565 / **236** | 768 / **231** | 954 / **227** | 1153 / **217** |
| 100 | 169 / **305** | 357 / **304** | 467 / **301** | 562 / **298** | 758 / **294** | 942 / **289** | 1143 / **276** |
| Max.cont. 125 | 147 / **380** | 336 / **378** | 447 / **375** | 544 / **371** | 745 / **367** | 920 / **362** | 1127 / **349** |
| Max.int. 150 | 119 / **458** | 318 / **456** | 432 / **453** | 526 / **449** | 713 / **444** | 894 / **431** | 1097 / **425** |

Max.cont. Max.int.

## FPMT 400 [410.9 cm³/rev]

Pressure (MPa)

| Flow (L/min) | 3 | 6 | 9 | 12 | 15 (Max.cont.) | 18 | 21 (Max.int.) |
|---|---|---|---|---|---|---|---|
| 10 | 176 / **24** | 367 / **23** | 560 / **22** | 715 / **21** | 885 / **20** | 1050 / **19** | 1209 / **18** |
| 20 | 179 / **49** | 370 / **48** | 565 / **47** | 726 / **44** | 899 / **42** | 1071 / **40** | 1236 / **38** |
| 40 | 176 / **96** | 370 / **95** | 567 / **93** | 733 / **90** | 919 / **87** | 1091 / **83** | 1263 / **79** |
| 60 | 174 / **145** | 361 / **143** | 563 / **139** | 729 / **135** | 920 / **131** | 1095 / **127** | 1269 / **121** |
| 80 | 166 / **193** | 353 / **191** | 553 / **188** | 719 / **184** | 912 / **180** | 1084 / **176** | 1263 / **170** |
| 100 | 150 / **242** | 339 / **240** | 538 / **238** | 708 / **234** | 896 / **228** | 1067 / **224** | 1252 / **218** |
| Max.cont. 125 | 135 / **302** | 309 / **300** | 524 / **298** | 688 / **294** | 873 / **289** | 1045 / **285** | 1221 / **278** |
| Max.int. 150 | 126 / **364** | 292 / **362** | 508 / **358** | 666 / **354** | 852 / **350** | 1020 / **346** | 1197 / **339** |

## FPMT 500 [523.6 cm³/rev]

Pressure (MPa)

| Flow (L/min) | 3 | 6 | 9 | 12 | 14 (Max.cont.) | 16 | 18 (Max.int.) |
|---|---|---|---|---|---|---|---|
| 10 | 222 / **18** | 451 / **18** | 692 / **18** | 892 / 17 | 1050 / **16** | 1193 / **15** | 1340 / **13** |
| 20 | 231 / **37** | 464 / **36** | 714 / **35** | 918 / 34 | 1070 / **33** | 1220 / **32** | 1377 / **30** |
| 40 | 230 / **75** | 466 / **74** | 727 / **73** | 941 / 72 | 1094 / **70** | 1244 / **68** | 1422 / **64** |
| 60 | 225 / **113** | 457 / **112** | 714 / **111** | 941 / 109 | 1088 / **107** | 1245 / **105** | 1409 / **101** |
| 80 | 213 / **151** | 431 / **150** | 696 / **149** | 927 / 147 | 1076 / **145** | 1244 / **143** | 1401 / **138** |
| 100 | 194 / **189** | 420 / **188** | 680 / **187** | 901 / 185 | 1063 / **183** | 1224 / **181** | 1383 / **177** |
| Max.cont. 125 | 182 / **237** | 398 / **236** | 641 / **235** | 877 / 233 | 1024 / **231** | 1199 / **229** | 1352 / **225** |
| Max.int. 150 | 147 / **284** | 369 / **283** | 618 / **282** | 853 / 280 | 1004 / **278** | 1167 / **276** | 1325 / **272** |

## FPMT 630 [629.1 cm³/rev]

Pressure (MPa)

| Flow (L/min) | 3 | 6 | 9 | 10.5 | 12 (Max.cont.) | 14 | 16 (Max.int.) |
|---|---|---|---|---|---|---|---|
| 10 | 233 / **14** | 520 / **14** | 795 / **13** | 902 / **13** | 1074 / **13** | 1194 / **11** | 1363 / **11** |
| 20 | 237 / **28** | 554 / **27** | 837 / **27** | 953 / **26** | 1117 / **26** | 1239 / **24** | 1407 / **22** |
| 40 | 239 / **62** | 553 / **62** | 860 / **61** | 987 / **60** | 1171 / **59** | 1308 / **56** | 1483 / **54** |
| 60 | 223 / **94** | 544 / **94** | 863 / **92** | 978 / **91** | 1172 / **90** | 1318 / **86** | 1498 / **82** |
| 80 | 220 / **123** | 537 / **122** | 854 / **121** | 965 / **119** | 1172 / **118** | 1314 / **114** | 1497 / **110** |
| 100 | 208 / **156** | 522 / **155** | 832 / **153** | 945 / **152** | 1156 / **150** | 1303 / **147** | 1488 / **142** |
| Max.cont. 125 | 201 / **196** | 499 / **196** | 810 / **194** | 931 / **192** | 1137 / **191** | 1292 / **187** | 1472 / **183** |
| Max.int. 150 | 174 / **233** | 492 / **232** | 785 / **231** | 921 / **230** | 1121 / **227** | 1277 / **223** | 1454 / **217** |

Torque (N•m) 1121
Speed (rpm) **227**

## FPMT 800 [801.8 cm³/rev]

Pressure (MPa)

| Flow (L/min) | 3 | 6 | 9 | 10.5 | 12.5 (Max.cont.) | 13 (Max.int.) |
|---|---|---|---|---|---|---|
| 10 | 346 / **12** | 677 / **12** | 1003 / **11** | 1159 / **11** | 1365 / **11** | 1390 / **10** |
| 20 | 356 / **24** | 692 / **24** | 1034 / **24** | 1183 / **23** | 1404 / **22** | 1458 / **18** |
| 40 | 365 / **50** | 703 / **50** | 1066 / **49** | 1236 / **48** | 1459 / **46** | 1516 / **40** |
| 60 | 354 / **74** | 703 / **73** | 1060 / **71** | 1237 / **71** | 1464 / **68** | 1520 / **63** |
| 80 | 332 / **99** | 686 / **98** | 1050 / **98** | 1226 / **96** | 1464 / **93** | 1514 / **86** |
| 100 | 305 / **125** | 654 / **123** | 1025 / **123** | 1207 / **121** | 1445 / **118** | 1506 / **110** |
| Max.cont. 125 | 280 / **154** | 622 / **153** | 989 / **153** | 1181 / **150** | 1422 / **149** | 1487 / **140** |
| Max.int. 150 | 247 / **185** | 590 / **184** | 953 / **183** | 1156 / **181** | 1406 / **179** | 1476 / **172** |

| Model | L | L1 | L2 |
|---|---|---|---|
| FPMT-160-W | 127 | 17 | 77 |
| FPMT-200-W | 131 | 21 | 81 |
| FPMT-250-W | 136 | 14 | 86 |
| FPMT-315-W | 142 | 20 | 91 |
| FPMT-400-W | 148 | 27 | 98 |
| FPMT-500-W | 157 | 35 | 106 |
| FPMT-630-W | 169 | 47 | 118 |
| FPMT-800-W | 180 | 58 | 129 |

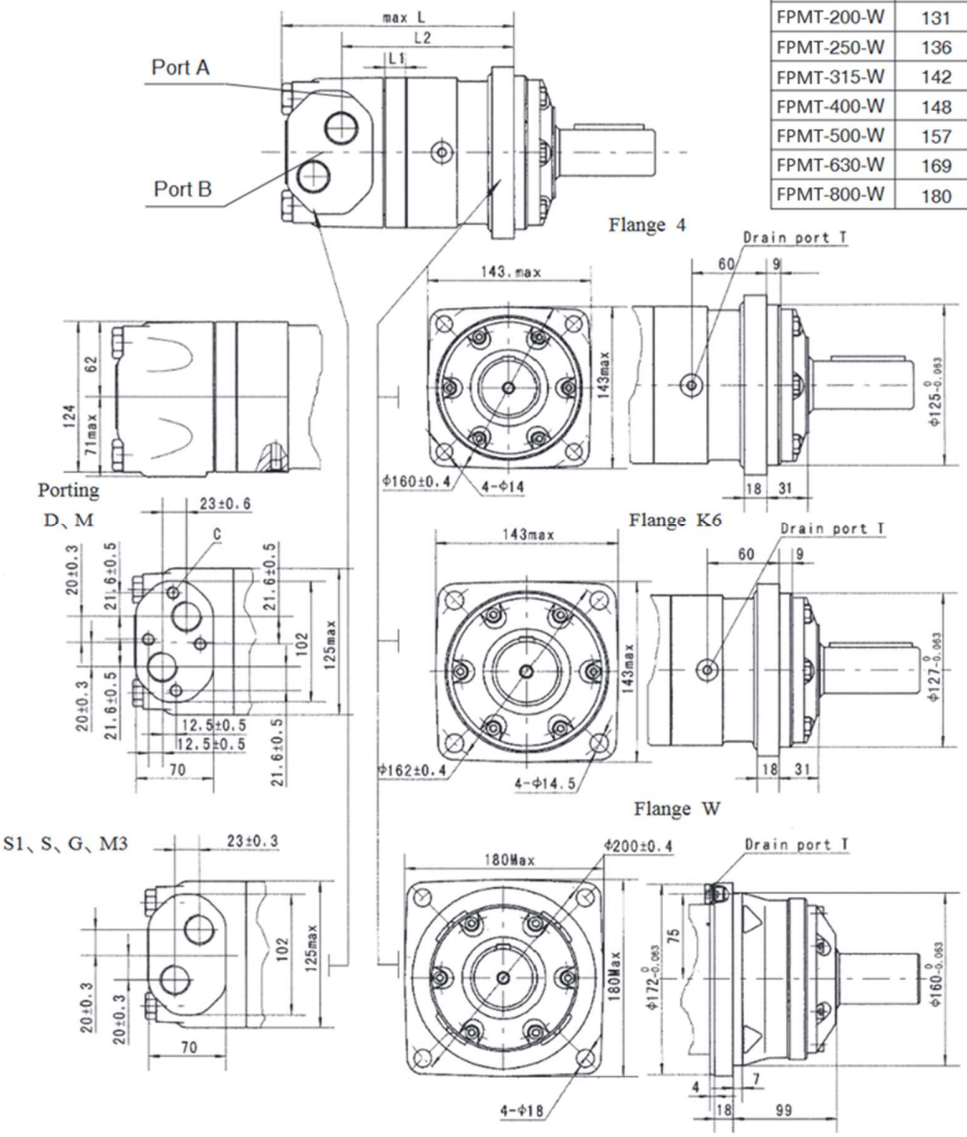


| Model | L | L1 | L2 |
|---|---|---|---|
| FPMT160 | 193 | 17 | 142.5 |
| FPMT200 | 197 | 21 | 146.5 |
| FPMT250 | 204 | 14 | 152.5 |
| FPMT315 | 210 | 20 | 158.5 |
| FPMT400 | 217 | 27 | 165.5 |
| FPMT500 | 225 | 35 | 173.5 |
| FPMT630 | 237 | 47 | 185.5 |
| FPMT800 | 248 | 58 | 196.5 |

| Content / Mounting | Code | | | | | |
|---|---|---|---|---|---|---|
| | D (depth) | M (depth) | S (depth) | G (depth) | M3 (depth) | S1 (depth) |
| P(A,B) | G3/4 (18) | M27 x 2 (18) | 1-1/16-12UN (18) | G3/4 (18) | M27 x 2 (18) | 1-1/16-12UN (18) |
| T | G1/4 (12) | M14 x 1.5 (12) | 9/16-18UNF (12) | G1/4 (12) | M14 x 1.5 (12) | 7/16-20UNF (12) |
| C | 4-M10(10) | 4-M10(10) | -- | -- | -- | -- |

Note:1)The thickness of the stator and rotor for disp. from 160 to 200 is the dimension of L1 adding on 3mm.
2)The thickness of the stator and rotor for disp. from 250 to 800 is the dimension of L1 adding on 7mm.

# FPMTE - DIMENSIONS AND MOUNTING DATA

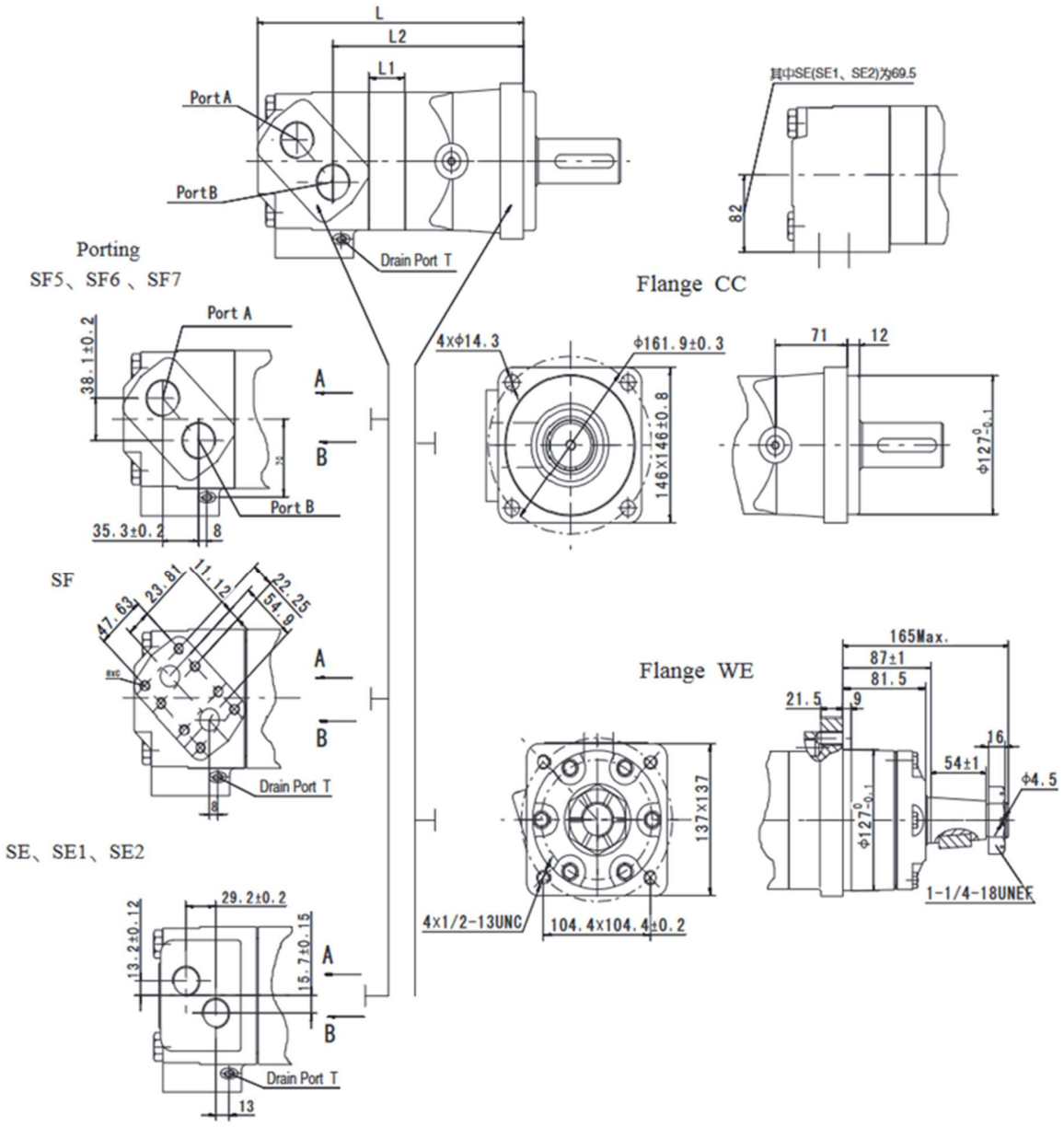


| Model | L | L1 | L2 |
|---|---|---|---|
| FPMTE230 | 238.5 | 12 | 164.5 |
| FPMTE250 | 240.5 | 14 | 166.5 |
| FPMTE315 | 246.5 | 20 | 172.5 |
| FPMTE400 | 253.5 | 27 | 179.5 |
| FPMTE500 | 261.5 | 35 | 187.5 |
| FPMTE630 | 273.5 | 47 | 199.5 |
| FPMTE800 | 284.5 | 58 | 210.5 |

Note:1)The data for the port of SF (SF5 and SF6and sf7
2)The data for the port of SE (SE1 and SE2) and flange WE:L-70 and L2-59.
3)The thickness of the stator and rotor for disp,from 315 to 800 is the dimension of L1 adding on 7mm.

| *Content Mounting* | *Code* | | | | | | |
|---|---|---|---|---|---|---|---|
| | *SF5(depth)* | *SF6 (depth)* | *SF7 (depth)* | *SF (depth)* | *SE (depth)* | *SE1 (depth)* | *SE2 (depth)* |
| P(A,B) | 1-5/16-12UN (18) | M33 x 2 (18) | G1 (18) | 3/4" (18) | 1-1/16-12UN (18) | 1-1/16-12UN (18) | G3/4 (18) |
| T | 7/16-20UNF (12) | M14 x 1.5 (12) | G1/4 (12) | 7/16-20UNF (12) | 9/16-18UNF (12) | 7/16-20UNF (12) | G1/4 (12) |
| C | -- | -- | -- | 8 x 3/8-16UNC | -- | | |

# FPMTS - DIMENSIONS AND MOUNTING DATA

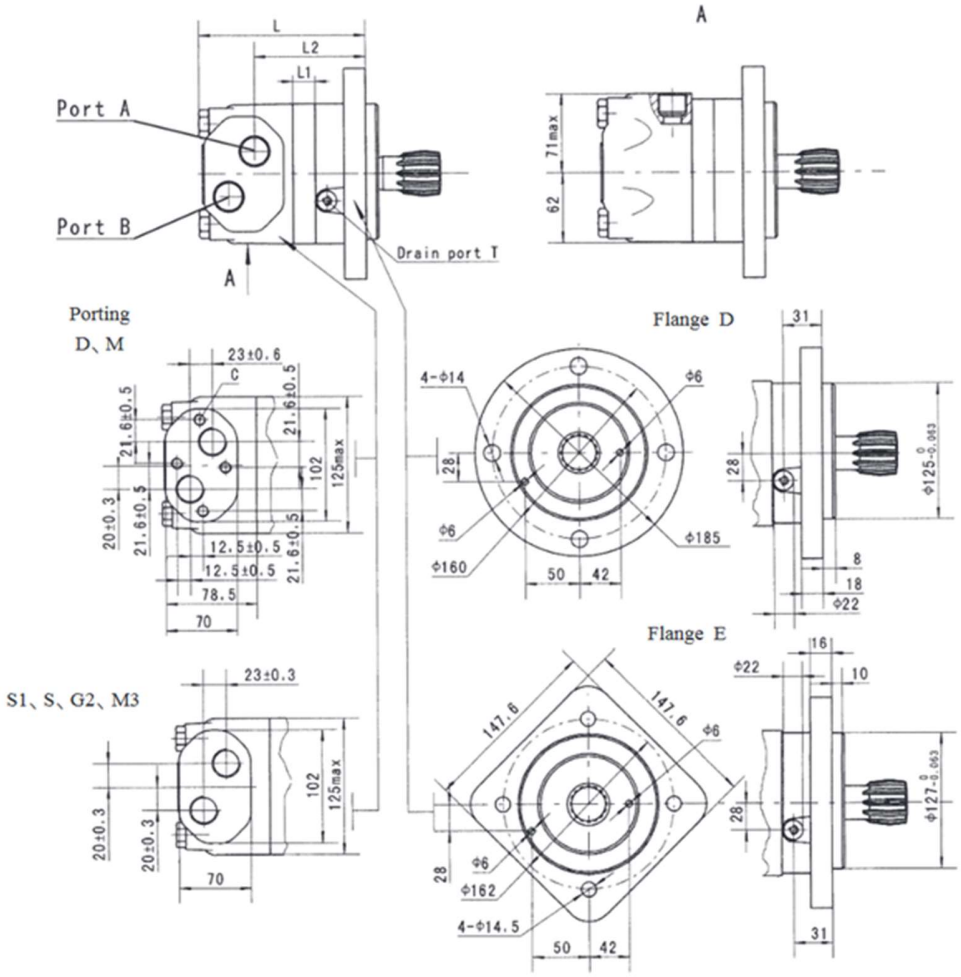


| Model | L | L1 | L2 |
|---|---|---|---|
| FPMT160 | 148 | 17 | 96.5 |
| FPMT200 | 152 | 21 | 100.5 |
| FPMT250 | 157 | 14 | 109 |
| FPMT315 | 163 | 20 | 115 |
| FPMT400 | 170 | 27 | 122 |
| FPMT500 | 178 | 35 | 130 |
| FPMT630 | 190 | 47 | 142 |
| FPMT800 | 201 | 58 | 153 |

| Content / Mounting | Code | | | | | |
|---|---|---|---|---|---|---|
| | D (depth) | M (depth) | S (depth) | G (depth) | M3 (depth) | S1 (depth) |
| P(A,B) | G3/4 (18) | M27 x 2 (18) | 1-1/16-12UN (18) | G3/4 (18) | M27 x 2 (18) | 1-1/16-12UN (18) |
| T | G1/4 (12) | M14 x 1.5 (12) | 9/16-18UNF (12) | G1/4 (12) | M14 x 1.5 (12) | 7/16-20UNF (12) |
| C | 4-M10(10) | 4-M10(10) | -- | -- | -- | -- |

Note:1)The thickness of the stator and rotor for disp.from 160 to 200 is the dimension of L1 adding on 3mm
2)The thickness of the stator and rotor for disp.from 250 to 800 is the dimension of L1 adding on 7mm

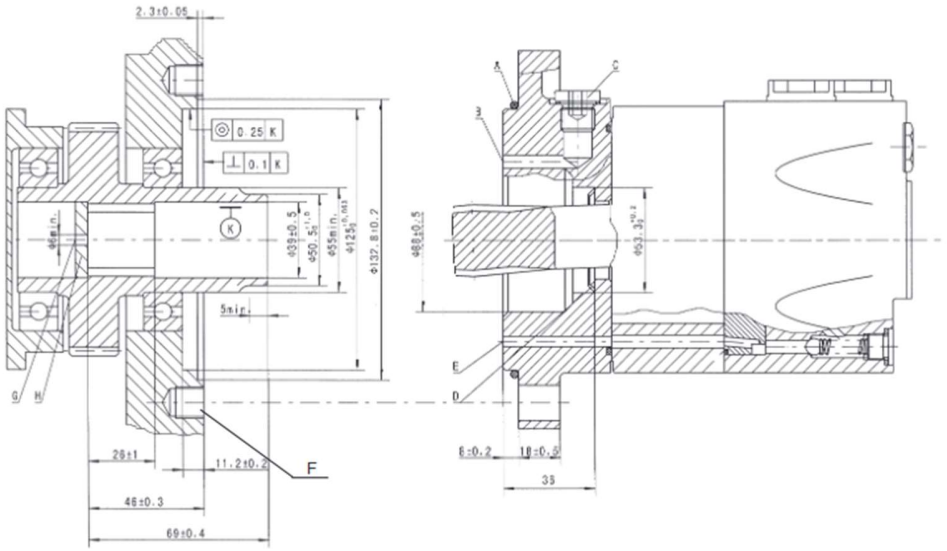

A: O-ring:125x3
B: External drain channel
C: Drain connection G 1/4;12 mm deep
D: Conical seal ring
E: Internal drain channel
F: M12; min. 18mm deep
G: Oil circulation hole
H: Hardened stop plate

## *INTERNAL SPLINE DATA FOR THE ATTACHED COMPONENT*

| *Fillet Root Side Fit* | | *mm* |
|---|---|---|
| Number of Teet h | Z | 16 |
| Diametral Pitch | DP | 12/24 |
| Pressure Angle | D | 30° |
| Pitch Dia. | D | ø33.8656 |
| Major Dia. | Dei | $\text{ø}38.4\ ^{+0.25}_{0}$ |
| Minor Dia. | Dii | $\text{ø}32.15\ ^{+0.04}_{0}$ |
| Space Width Circular | E | $4.516_{\pm 0.037}$ |

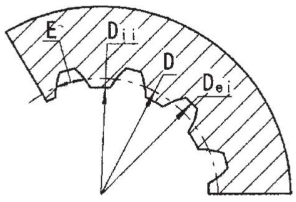


Hardering Specification: HRC 62±2
Effective case depth 0.7±0.2

# FPMTJ - DIMENSIONS AND MOUNTING DATA

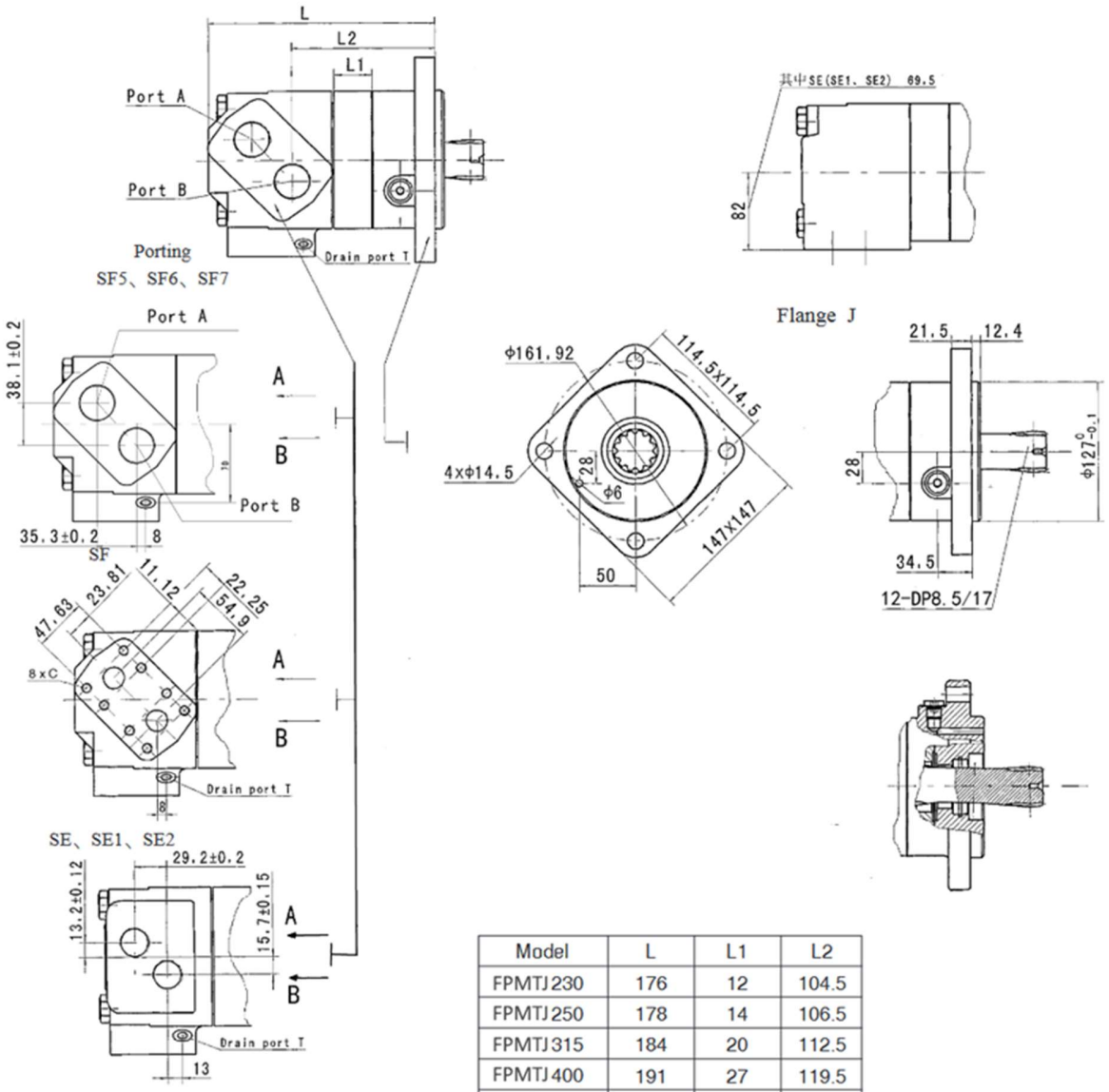


| Model | L | L1 | L2 |
|---|---|---|---|
| FPMTJ230 | 176 | 12 | 104.5 |
| FPMTJ250 | 178 | 14 | 106.5 |
| FPMTJ315 | 184 | 20 | 112.5 |
| FPMTJ400 | 191 | 27 | 119.5 |
| FPMTJ500 | 199 | 35 | 127.5 |
| FPMTJ630 | 211 | 47 | 139.5 |
| FPMTJ800 | 222 | 58 | 150.5 |

Note:1)The data for the port of SF (SF5 and SF6 andSF7).
2)The data for the port of SE (SE1 and SE2) and flange WE:L-70 and L2-59.
3)The thickness of the stator and rotor is the dimension of L1 adding on 7mm.

| *Content Mounting* | *Code* | | | | | | |
|---|---|---|---|---|---|---|---|
| | *SF5 (depth)* | *SF6 (depth)* | *SF7 (depth)* | *SF (depth)* | *SE (depth)* | *SE1 (depth)* | *SE2 (depth)* |
| P(A,B) | 1-5/16-12UN (18) | M33 x 2 (18) | G1 (18) | 3/4" (18) | 1-1/16-12UN (18) | 1-1/16-12UN (18) | G3/4 (18) |
| T | 7/16-20UNF (12) | M14 x 1.5 (12) | G1/4 (12) | 7/16-20UNF (12) | 9/16-18UNF (12) | 7/16-20UNF (12) | G1/4 (12) |
| C | -- | -- | -- | 8 x 3/8-16UNC | -- | | |

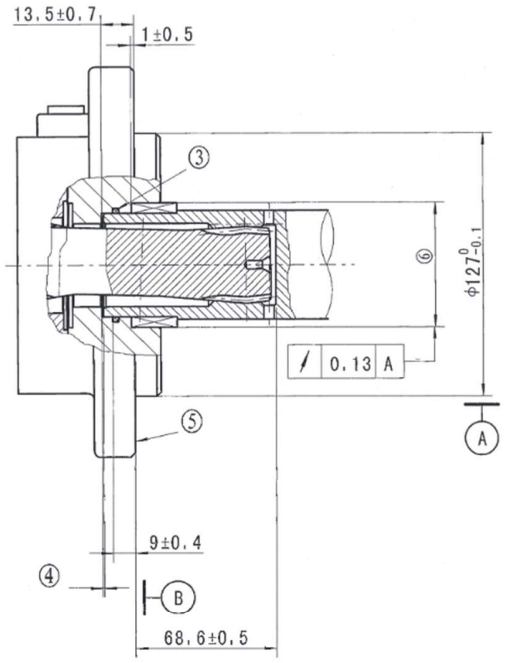


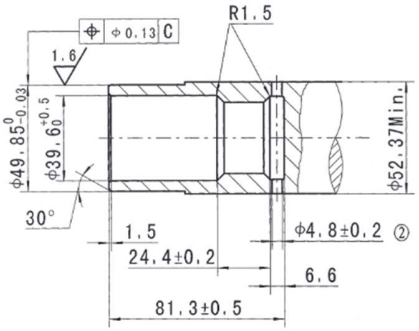


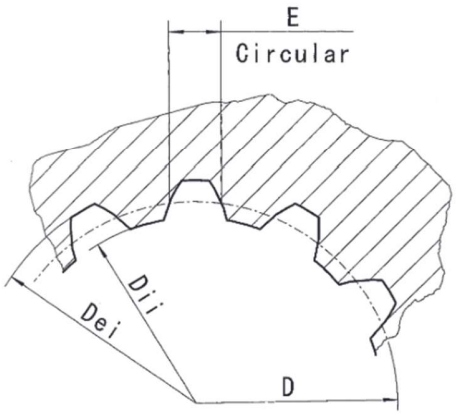


INTERNAL SPLINE DATA FOR THE ATTACHED COMPONENT

| Fillet Root Side Fit | | mm |
|---|---|---|
| Number of Teeth | Z | 12 |
| Diametral Pitch | DP | 8.5/17 |
| Pressure Angle | D | 30° |
| Pitch Dia. | $\alpha_D$ | ø35.858823 |
| Major Dia. | $D_{ei}$ | ø38.97 $^{+0.20}_{0}$ |
| Minor Dia. | $D_{ii}$ | ø33.3 $^{+0.18}_{0}$ |
| Space Width [Circular] | E | 5.866±0.032 |
| Dimension between two pins(ø4) | $M_e$ | 26.929-27.084 |

①Internal spline in mating part to be as follows:Material to be ASTM A304, 8620H. Carborize to a hardness of 60-64HRC with case depth (to 50HRC) of 0.75-1 [.030-.040] (dimensions apply after heat treat).
②Mating part to have critical dimensions as shown,
Oil holes must be provided and open for proper oil circulation.
③Some means of maintaining clearance between shaft and mounting flange must be provided.
④Seal to be furnished with motor for proper oil circulation thru splines.
⑤Similar to SAE "C" Four Bolt Flange
⑥Counterbore designed to adapt to a standard sleeve bearing 50.010-50.038 [1.9689-1.9700] ID by 60.51-60.079 [2.3642-2.3653] O.D.(Oilite bronze sleeve bearing).
C This surface to be diameter of output shaft.

# SHAFT EXTENSIONS FOR FPMT(E) MOTORS

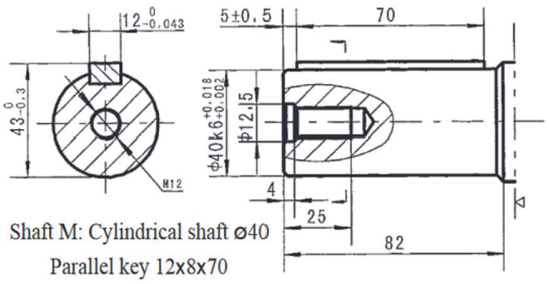


Shaft M: Cylindrical shaft ø40
Parallel key 12x8x70

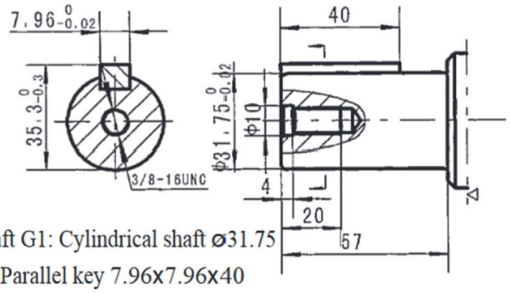


Shaft G1: Cylindrical shaft ø31.75
Parallel key 7.96x7.96x40

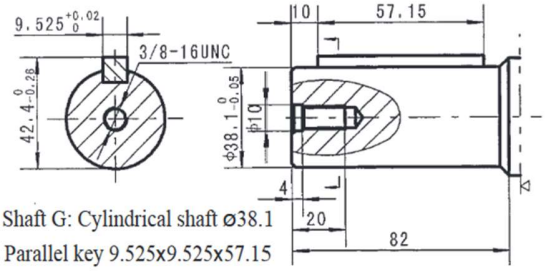


Shaft G: Cylindrical shaft ø38.1
Parallel key 9.525x9.525x57.15

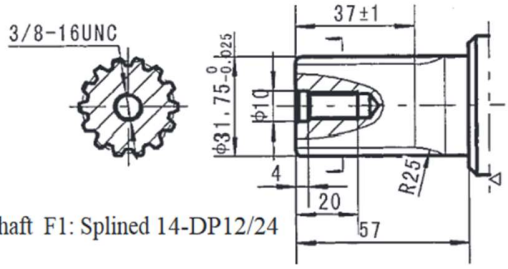


Shaft F1: Splined 14-DP12/24

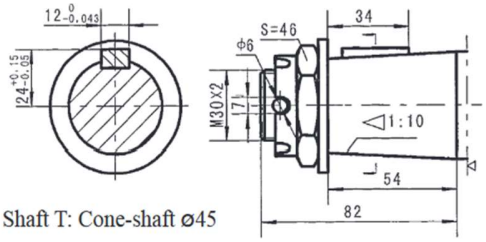


Shaft T: Cone-shaft ø45
Parallel key B12x8x28
Tightening torque:500±10Nm

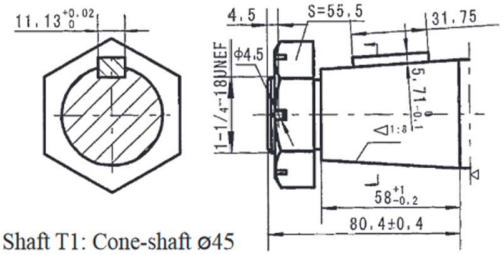


Shaft T1: Cone-shaft ø45
Parallel key 11.13x11.13x31.75
Tightening torque:500±10Nm

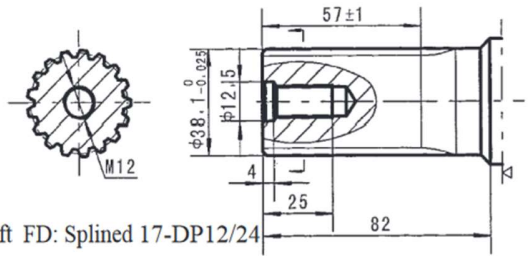


Shaft FD: Splined 17-DP12/24

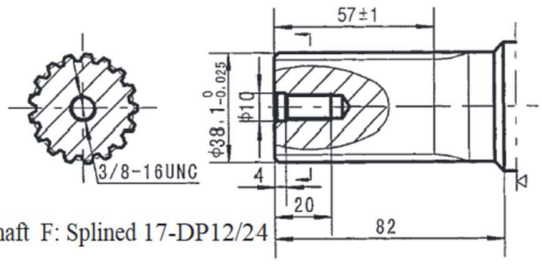


Shaft F: Splined 17-DP12/24

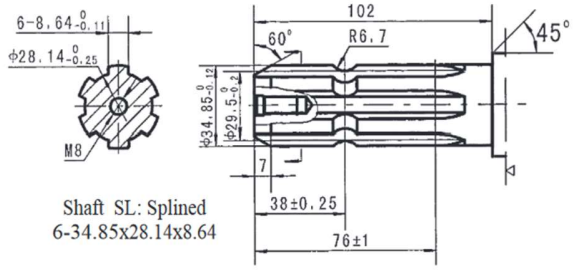


Shaft SL: Splined
6-34.85x28.14x8.64

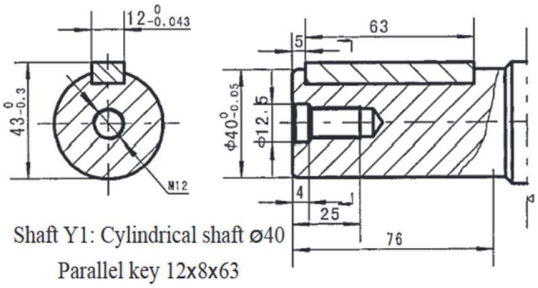


Shaft Y1: Cylindrical shaft ø40
Parallel key 12x8x63

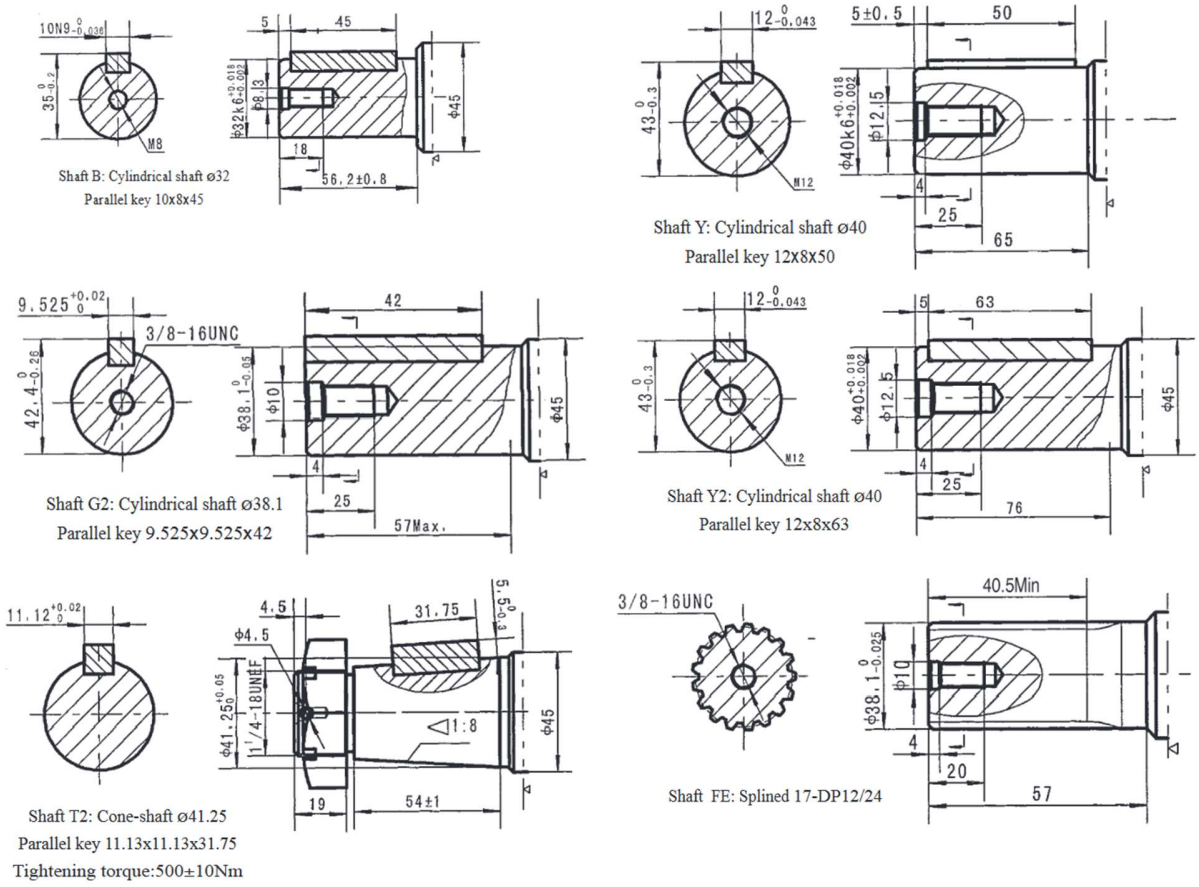


▷ Motor Mounting Surface

## *Permissible shaft seal pressure*

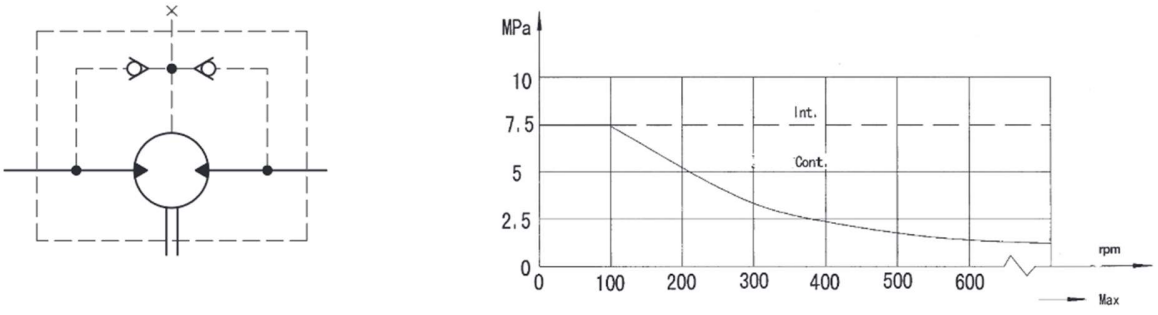

## *Standard direction of shaft rotation: Standard*

When facing shaft end of motor, shaft to rotate:

- Clockwise when port "A" is pressurized

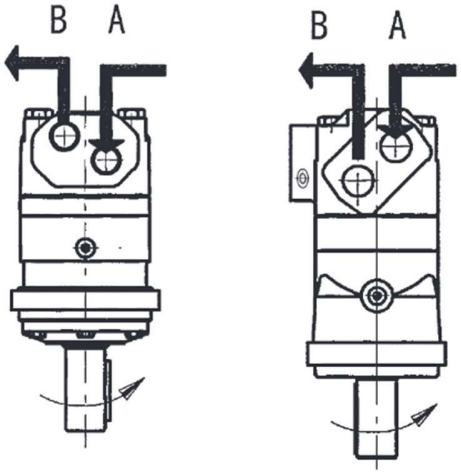


## *Oil flow in drain line*

The table shows the max. oil flow in the drain line at a return pressure less than 0.5-1 MPa.
In applications without drain line, output shaft seal exceeds a bit of the pressure in the return line. When applications use the drain line, the pressure of output shaft seal equals the pressure in drain line.

## *Axial and radial forces*

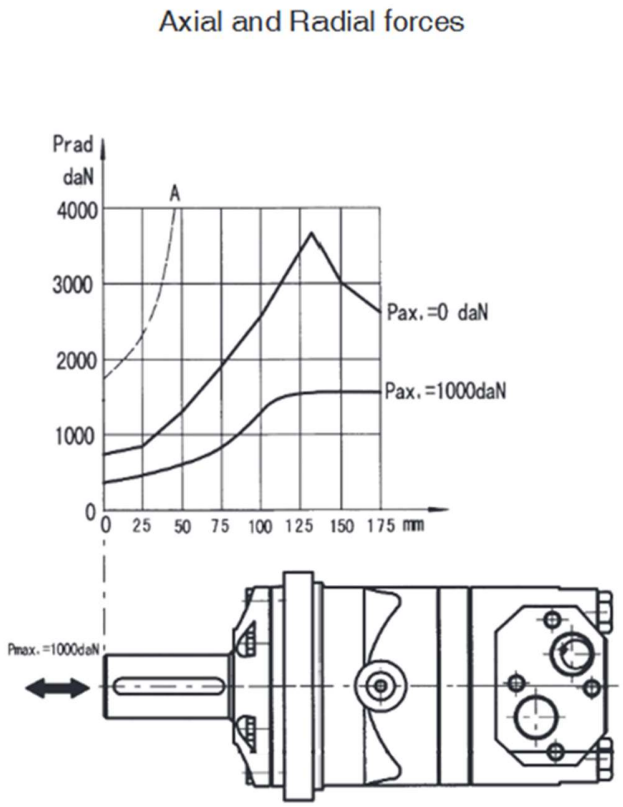


The output shaft runs in tapered bearings that permit high axial and radial forces, Curve "A" shows max radial shaft load. Any shaft loads exceeding the values quoted in the curve will involve a risk of breakage, The two other curves apply to a B10 bearing life of 3000 hours at 200 RPM.

# Order Information

| 1 | 2 | 3 | 4 | 5 | 6 | 7 | 8 |
|---|---|---|---|---|---|---|---|
| FPMT | – | – | – | – | – | – | – |
| FPMTS | – | – | – | – | – | – | – |

| Pos.1 | 2 | 3 | | 4 | | 5 | | 6 | | 7 | | 8 |
|---|---|---|---|---|---|---|---|---|---|---|---|---|
| Code | Disp. | Flange | | Output Shaft | | Ports and Drain Port | | Rotation Direction | | Paint | | Unusually Function |
| BMT | 160 | 4-Ø14 Square-flangeØ160, pilotØ125×9 | M | Shaft Ø40 , parallel key 12×8×70 | D | G3/4 Manifold Mount,4-M10 , G1/4 | Omit | Standard | 00 | No paint | Omit | Standard |
| | 200 | 4-Ø14.5Square-flangeØ162, pilotØ127×9 | G | Shaft Ø38.1 ,parallel key 9.52×9.52×57.15 | | | | | | | | |
| | 250 | | F | Shaft Ø38.1 ,splined tooth 17-DP12/24 | M | M27×2 Manifold Mount,4-M10, M14×1.5 | R | Opposite | Omit | Blue | F | Free Running |
| | 315 | 4-Ø18 Wheel-flangeØ200, pilotØ160×7 | FD | Shaft Ø38.1 ,splined tooth 17-DP12/24 | S | 1-1/16-12UN O-ring, 9/16-18UNF | | | B | Black | LS | Low Speed |
| | 400 | | T | Cone-shaft 1:10 Ø45 ,parallel key B12×8×28 | S1 | 1-1/16-12UN O-ring, 7/16-20UNF | | | S | Silver grey | | |
| | 500 | | T1 | Cone-shaft 1:8 Ø45 , parallel key 11.13×11.13×31.75 | G | G3/4,G1/4 | | | | | | |
| | 630 | | SL | shaft Ø34.85,Splined key | M3 | M27×2,M14×1.5 | | | | | | |
| | 800 | | G1 | Splined key 6-34.85×28.14×8.64 shaftØ31.75 , parallel key 7.96×7.96×40 | | | | | | | | |
| | | | F1 | Shaft Ø31.75,splined tooth 14-DP12/24 | | | | | | | | |
| BMTS | D | 4-Ø14 Circle-flange Ø160, pilot Ø125×8 | Omit | Short shaft 16-DP12/24 | | | | | | | | |
| | E | 4-Ø14.5 Square-flange Ø162, pilot Ø127×10 | | | | | | | | | | |

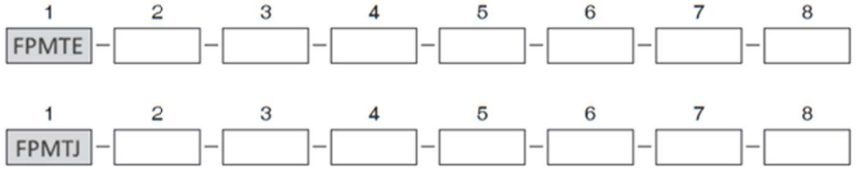


| Pos.1 | 2 | 3 | | 4 | | 5 | | 6 | | 7 | | 8 | |
|---|---|---|---|---|---|---|---|---|---|---|---|---|---|
| Code | Disp. | Flange | | Output Shaft | | Ports and Drain Port | | Rotation Direction | | Paint | | Unusually Function | |
| FPMTE | 230<br>250<br>315<br>400<br>500<br>630<br>800 | CC | 4-Ø14.3 Square-flange Ø161.9, pilotØ127 × 12 | G2<br>FE<br>Y1<br>Y2<br>T2 | Shaft Ø38.1 ,parallel key 9.52 × 9.52 × 42<br>Shaft Ø38.1 ,splined tooth 17-DP12/24<br>ShaftØ40,parallel key 12 × 8 × 63<br>ShaftØ40,parallel key 12 × 8 × 63<br>Cone-shaft 1:8 Ø41.25 , parallel key 11.13 × 11.13 × 31.75 | SF<br>SF5<br>SF6<br>SF7<br>SE<br>SE1<br>SE2 | 3/4" , Manifold Mount,8-3/8-16UNC, 7/16-20UNF<br>1-5/16-12UN O-ring,7/16-20 UNF<br>M33 × 2,M14 × 1.5<br>G1,G1/4<br>1-1/16-12UN O-ring,9/16-18UNF<br>1-1/16-12UN O-ring,7/16-20 UNF<br>G3/4,G1/4 | Omit<br>R | Standard<br>Opposite | 00<br>Omit<br>B<br>S | No paint<br>Blue<br>Black<br>Silver grey | Omit<br>F<br>LS | Standard<br>Free Running<br>Low Speed |
| | | WE | 4-1/2-13UNC Wheel-flangeØ147.6, pilotØ127 × 9 | T3 | Cone-shaft 1:8 Ø41.25 , parallel key 11.13 × 11.13 × 31.75 | | | | | | | | |
| FPMTJ | | J | 4-Ø14.5 Square-flange Ø161.9 pilot Ø127 × 12.4 | Omit | Short shaft 12-DP8.5/17 | | | | | | | | |

Note:When the table is used, please fill the code of left rows in the table and give us, which the code information is consists of construction, displacement, mounting flange, output shaft and ports . If the specification is not in the table or you have specific requirements, please contact us .

# FPMV SERIES HYDRAULIC MOTOR

FPMV series motor adapt the advanced Geroler gear set designed with disc distribution flow and high pressure. The unit can be supplied the individual variant in operating multifunction in accordance with requirement of applications.

*Characteristic features*

- Advanced manufacturing devices for the Geroler gear set, which use low pressure of start- up, provide smooth and reliable operation and high efficiency.
- The output shaft adapts in tapered roller bearings that permit high axial and radial forces. The case can offer capacities of high pressure and high torque in the wide of applications.
- Advanced design in disc distribution flow, which can automatically compensate in operating with high volume efficiency and long life, provide smooth and reliable operation.

## *Main Specification*

| *Type* | | *FPMV 315* | *FPMV 400* | *FPMV 500* | *FPMV 630* | *FPMV 800* | *FPMV 1000* |
|---|---|---|---|---|---|---|---|
| displacement ($cm^3$/rev) | | 333 | 419 | 518 | 666 | 801 | 990 |
| Max. speed (rpm) | cont. | 510 | 500 | 400 | 320 | 250 | 200 |
| | int. | 630 | 600 | 480 | 380 | 300 | 240 |
| Max. torque (Nm) | cont. | 920 | 1180 | 1460 | 1660 | 1880 | 2015 |
| | int. | 1110 | 1410 | 1760 | 1940 | 2110 | 2280 |
| | peak | 1290 | 1640 | 2050 | 2210 | 2470 | 2400 |
| Max. output (kW) | cont. | 38.0 | 47.0 | 47.0 | 40.0 | 33.0 | 28.6 |
| | int. | 46.0 | 56.0 | 56.0 | 56.0 | 44.0 | 40.0 |
| Max. pressure drop (MPa) | cont. | 20 | 20 | 20 | 18 | 16 | 14 |
| | int. | 24 | 24 | 24 | 21 | 18 | 16 |
| | peak | 28 | 28 | 28 | 24 | 21 | 18 |
| Max. flow (L/min) | cont. | 160 | 200 | 200 | 200 | 200 | 200 |
| | int. | 200 | 240 | 240 | 240 | 240 | 240 |
| Weight (kg) | | 31.8 | 32.6 | 33.5 | 34.9 | 36.5 | 38.6 |

- Continuous pressure: Max. value of operating motor continuously.
- Intermittent pressure: Max. value of operating motor in 6 seconds per minute.
- Peak pressure: Max. value of operating motor in 0.6 second per minute.

# *Performance Data*

## FPMV 315 [333 cm³/rev]

| Flow (L/min) | Pressure (MPa) 3.5 | 7 | 10 | 14 | 18 | 20 | 24 |
|---|---|---|---|---|---|---|---|
| | | | | | | Max.cont. | Max.int. |
| 10 | 140 | 294 | 440 | 610 | 742 | 845 | 1000 |
| | **26** | **24** | **23** | **22** | **20** | **17** | **14** |
| 20 | 153 | 314 | 466 | 636 | 787 | 895 | 1070 |
| | **55** | **54** | **53** | **52** | **51** | **48** | **44** |
| 50 | 149 | 312 | 465 | 654 | 815 | 935 | 1112 |
| | **145** | **144** | **142** | **140** | **137** | **133** | **127** |
| 75 | 143 | 304 | 458 | 642 | 816 | 940 | 1119 |
| | **220** | **218** | **215** | **211** | **207** | **202** | **195** |
| 100 | 136 | 297 | 452 | 636 | 810 | 936 | 1108 |
| | **294** | **292** | **290** | **287** | **283** | **278** | **270** |
| 125 | 123 | 286 | 442 | 626 | 799 | 921 | 1093 |
| | **368** | **366** | **364** | **361** | **357** | **352** | **345** |
| 150 | 114 | 275 | 435 | 615 | 788 | 906 | 1078 |
| | **445** | **443** | **441** | **437** | **430** | **422** | **410** |
| Max.cont. 160 | 107 | 268 | 430 | 608 | 780 | 895 | 1070 |
| | **475** | **473** | **470** | **466** | **460** | **452** | **439** |
| Max.int. 200 | 82 | 249 | 412 | 593 | 758 | 871 | 1047 |
| | **596** | **594** | **590** | **584** | **576** | **565** | **544** |

## FPMV 400 [419 cm³/rev]

| Flow (L/min) | Pressure (MPa) 3.5 | 7 | 10 | 14 | 18 | 20 | 24 |
|---|---|---|---|---|---|---|---|
| | | | | | | Max.cont. | Max.int. |
| 10 | 183 | 385 | 568 | 776 | 968 | 1101 | 1292 |
| | **20** | **20** | **19** | **18** | **17** | **16** | **14** |
| 20 | 196 | 398 | 590 | 815 | 1010 | 1152 | 1346 |
| | **44** | **44** | **43** | **42** | **40** | **39** | **37** |
| 50 | 200 | 402 | 603 | 842 | 1040 | 1186 | 1430 |
| | **114** | **113** | **113** | **112** | **110** | **108** | **103** |
| 75 | 195 | 394 | 596 | 838 | 1043 | 1188 | 1432 |
| | **175** | **173** | **170** | **166** | **163** | **157** | **152** |
| 100 | 172 | 385 | 593 | 827 | 1036 | 1184 | 1425 |
| | **236** | **235** | **233** | **231** | **227** | **223** | **215** |
| 125 | 167 | 374 | 583 | 816 | 1021 | 1177 | 1413 |
| | **296** | **294** | **291** | **288** | **282** | **275** | **268** |
| 150 | 158 | 361 | 559 | 801 | 1008 | 1165 | 1390 |
| | **355** | **354** | **352** | **349** | **344** | **335** | **324** |
| 175 | 143 | 346 | 553 | 784 | 989 | 1145 | 1377 |
| | **416** | **414** | **411** | **407** | **403** | **396** | **388** |
| Max.cont. 200 | 118 | 331 | 536 | 770 | 969 | 1128 | 1356 |
| | **475** | **473** | **469** | **463** | **455** | **448** | **439** |
| Max.int. 240 | 82 | 301 | 506 | 740 | 943 | 1104 | 1332 |
| | **571** | **569** | **565** | **548** | **539** | **530** | **520** |

## FPMV 500 [518 cm³/rev]

| Flow (L/min) | Pressure (MPa) 3.5 | 7 | 10 | 14 | 18 | 20 | 24 |
|---|---|---|---|---|---|---|---|
| | | | | | | Max.cont. | Max.int. |
| 10 | 242 | 468 | 696 | 959 | 1190 | 1353 | 1607 |
| | **17** | **17** | **16** | **16** | **15** | **13** | **11** |
| 20 | 245 | 501 | 738 | 1003 | 1232 | 1394 | 1658 |
| | **36** | **35** | **35** | **34** | **33** | **32** | **29** |
| 50 | 240 | 500 | 758 | 1025 | 1270 | 1449 | 1743 |
| | **93** | **92** | **91** | **90** | **88** | **85** | **80** |
| 75 | 233 | 498 | 752 | 1030 | 1288 | 1475 | 1766 |
| | **140** | **139** | **137** | **135** | **132** | **127** | **120** |
| 100 | 228 | 491 | 748 | 1026 | 1289 | 1472 | 1760 |
| | **189** | **187** | **185** | **182** | **178** | **173** | **166** |
| 125 | 220 | 483 | 742 | 1014 | 1280 | 1460 | 1745 |
| | **237** | **236** | **234** | **231** | **227** | **223** | **216** |
| 150 | 201 | 465 | 723 | 1008 | 1250 | 1429 | 1736 |
| | **287** | **286** | **284** | **281** | **276** | **270** | **260** |
| 175 | 182 | 446 | 711 | 997 | 1238 | 1406 | 1715 |
| | **335** | **334** | **332** | **329** | **325** | **320** | **310** |
| Max.cont. 200 | 161 | 423 | 676 | 974 | 1218 | 1385 | 1697 |
| | **384** | **383** | **381** | **378** | **374** | **366** | **354** |
| Max.int. 240 | 120 | 378 | 622 | 921 | 1172 | 1340 | 1650 |
| | **461** | **459** | **457** | **454** | **450** | **444** | **432** |

Torque (N•m) 1340
Speed (rpm) **444**

## FPMV 630 [666 cm³/rev]

| Flow (L/min) | Pressure (MPa) 3.5 | 6 | 9 | 12 | 15 | 18 | 21 |
|---|---|---|---|---|---|---|---|
| | | | | | | Max.cont. | Max.int. |
| 10 | 280 | 522 | 812 | 1100 | 1268 | 1549 | 1784 |
| | **14** | **13** | **13** | **12** | **12** | **11** | **10** |
| 20 | 288 | 552 | 839 | 1101 | 1315 | 1607 | 1864 |
| | **28** | **28** | **27** | **27** | **26** | **24** | **22** |
| 50 | 289 | 555 | 868 | 1137 | 1364 | 1682 | 1956 |
| | **72** | **72** | **71** | **69** | **68** | **66** | **62** |
| 75 | 270 | 548 | 863 | 1120 | 1352 | 1680 | 1964 |
| | **109** | **108** | **106** | **104** | **102** | **99** | **94** |
| 100 | 264 | 538 | 856 | 1093 | 1350 | 1674 | 1965 |
| | **146** | **145** | **143** | **141** | **138** | **135** | **130** |
| 125 | 251 | 516 | 837 | 1071 | 1336 | 1659 | 1950 |
| | **184** | **183** | **181** | **179** | **177** | **173** | **168** |
| 150 | 240 | 495 | 817 | 1063 | 1330 | 1650 | 1928 |
| | **221** | **220** | **219** | **217** | **215** | **212** | **205** |
| 175 | 210 | 485 | 796 | 1052 | 1300 | 1636 | 1908 |
| | **259** | **258** | **257** | **254** | **250** | **246** | **241** |
| Max.cont. 200 | 182 | 469 | 751 | 1018 | 1280 | 1611 | 1883 |
| | **297** | **297** | **295** | **293** | **290** | **284** | **273** |
| Max.int. 240 | 130 | 416 | 712 | 978 | 1237 | 1563 | 1835 |
| | **358** | **357** | **355** | **351** | **346** | **340** | **332** |

cont.
int.

## FPMV 800 [801 cm³/rev]

| Flow (L/min) | Pressure (MPa) 2.5 | 5 | 8 | 10 | 13 | 16 | 18 (Max.int.) |
|---|---|---|---|---|---|---|---|
| 10 | 278 **11** | 565 **10** | 830 **10** | 1095 **9** | 1405 **8** | 1712 **8** | 1915 **7** |
| 20 | 282 **23** | 571 **22** | 845 **22** | 1150 **21** | 1456 **20** | 1783 **18** | 1994 **16** |
| 50 | 288 **60** | 582 **59** | 856 **57** | 1162 **56** | 1463 **54** | 1790 **52** | 2001 **48** |
| 75 | 269 **91** | 580 **90** | 855 **89** | 1165 **87** | 1465 **84** | 1786 **81** | 1993 **77** |
| 100 | 251 **122** | 566 **121** | 840 **120** | 1140 **118** | 1448 **115** | 1767 **111** | 1985 **105** |
| 125 | 242 **153** | 535 **152** | 824 **150** | 1118 **147** | 1427 **143** | 1739 **139** | 1976 **133** |
| 150 | 236 **185** | 526 **183** | 808 **181** | 1102 **178** | 1401 **174** | 1714 **169** | 1959 **163** |
| 175 | 215 **216** | 504 **214** | 793 **212** | 1079 **209** | 1377 **206** | 1698 **203** | 1936 **196** |
| Max.cont. 200 | 197 **247** | 468 **245** | 765 **243** | 1063 **240** | 1362 **237** | 1681 **232** | 1913 **225** |
| Max.int. 240 | 118 **297** | 388 **296** | 713 **295** | 1020 **293** | 1318 **288** | 1637 **283** | 1838 **277** |

cont.
int.

## FPMV 1000 [990 cm³/rev]

| Flow (L/min) | Pressure (MPa) 2.5 | 5 | 7 | 10 | 14 (Max.cont.) | 16 (Max.int.) |
|---|---|---|---|---|---|---|
| 10 | 312 **9** | 640 **9** | 971 **9** | 1400 **8** | 1978 **7** | 2259 **6** |
| 30 | 320 **28** | 648 **27** | 978 **26** | 1410 **25** | 1980 **23** | 2270 **21** |
| 50 | 326 **47** | 655 **46** | 992 **45** | 1422 **43** | 2015 **41** | 2280 **38** |
| 75 | 318 **72** | 642 **71** | 987 **70** | 1425 **68** | 2003 **66** | 2276 **63** |
| 100 | 309 **98** | 634 **97** | 983 **95** | 1418 **93** | 1994 **90** | 2243 **86** |
| 125 | 303 **123** | 624 **122** | 975 **120** | 1409 **117** | 1988 **114** | 2224 **110** |
| 150 | 278 **149** | 602 **148** | 961 **146** | 1368 **144** | 1963 **140** | 2208 **133** |
| 175 | 264 **174** | 580 **172** | 946 **170** | 1338 **166** | 1925 **162** | 2159 **155** |
| Max.cont. 200 | 230 **199** | 556 **196** | 912 **193** | 1300 **190** | 1891 **185** | 2105 **178** |
| Max.int. 240 | 166 **240** | 513 **237** | 867 **233** | 1267 **229** | 1825 **225** | 2034 **218** |

Torque (N•m) 1825
Speed (rpm) **225**

# FPMV - DIMINSIONS AND MOUNTING DATA

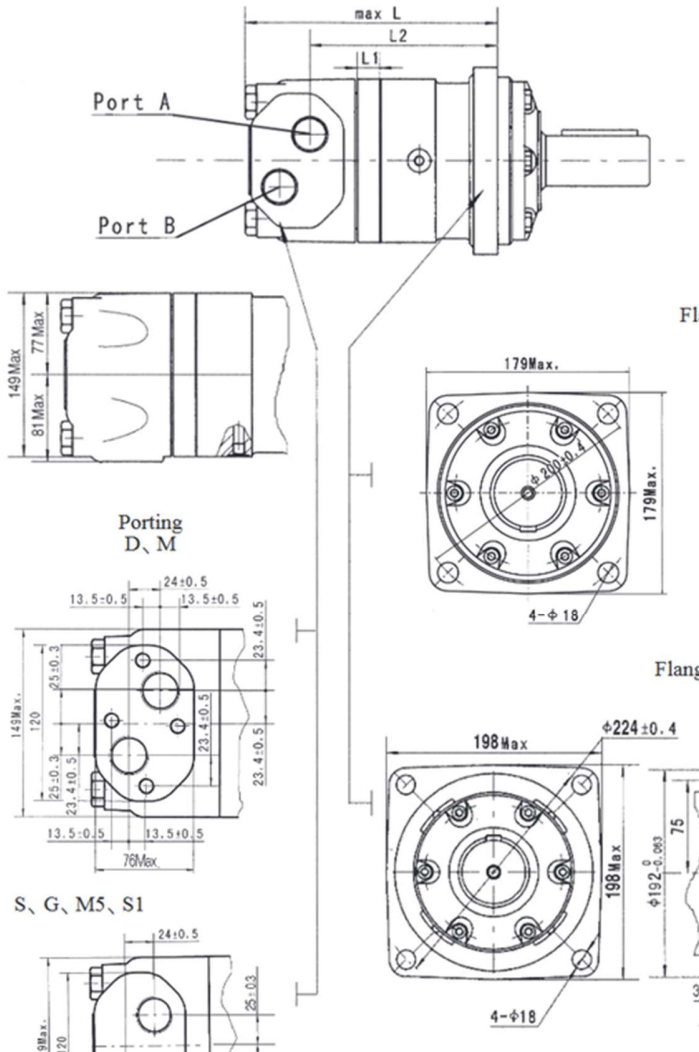


| Model | L | L1 | L2 |
|---|---|---|---|
| FPMV 315 | 217 | 20 | 161.5 |
| FPMV 400 | 224 | 27 | 168.5 |
| FPMV 500 | 232 | 35 | 176.5 |
| FPMV 630 | 244 | 47 | 188.5 |
| FPMV 800 | 255 | 58 | 199.5 |
| FPMV1000 | 271 | 74 | 215.5 |

Flange 4

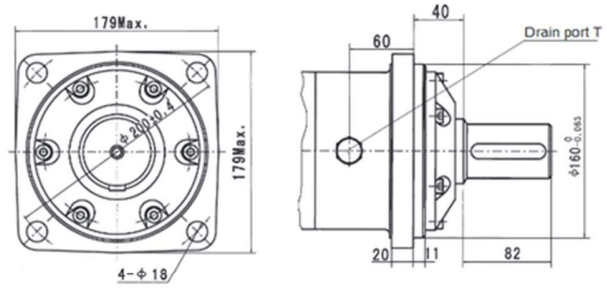


Flange W




| Model | L | L1 | L2 |
|---|---|---|---|
| FPMV-315-W | 148.5 | 20 | 93.5 |
| FPMV-400-W | 155.5 | 27 | 100.5 |
| FPMV-500-W | 163.5 | 35 | 108.5 |
| FPMV-630-W | 175.5 | 47 | 120.5 |
| FPMV-800-W | 186.5 | 58 | 131.5 |
| FPMV-1000-W | 202.5 | 74 | 147.5 |

Note:The thickness of the stator and rotor is the dimension of L1adding on 7mm.

| Content / Mounting | Code | | | | | |
|---|---|---|---|---|---|---|
| | D (depth) | M (depth) | S (depth) | G (depth) | M5 (depth) | S1 (depth) |
| P(A,B) | G1 (18) | M33 x 2 (18) | 1-5/16-12UN(18) | G1 (18) | M33 x 2 (18) | 1-5/16-12UN(18) |
| T | G1/4 (12) | M14 x 1.5 (12) | 9/16-18UNF(12) | G1/4 (12) | M14 x 1.5 (12) | 7/16-20UNF(12) |
| C | 4-M12 (10) | 4-M12 (10) | -- | -- | -- | -- |

# FPMV - SHAFT EXTENSIONS DIMENSIONS DATA

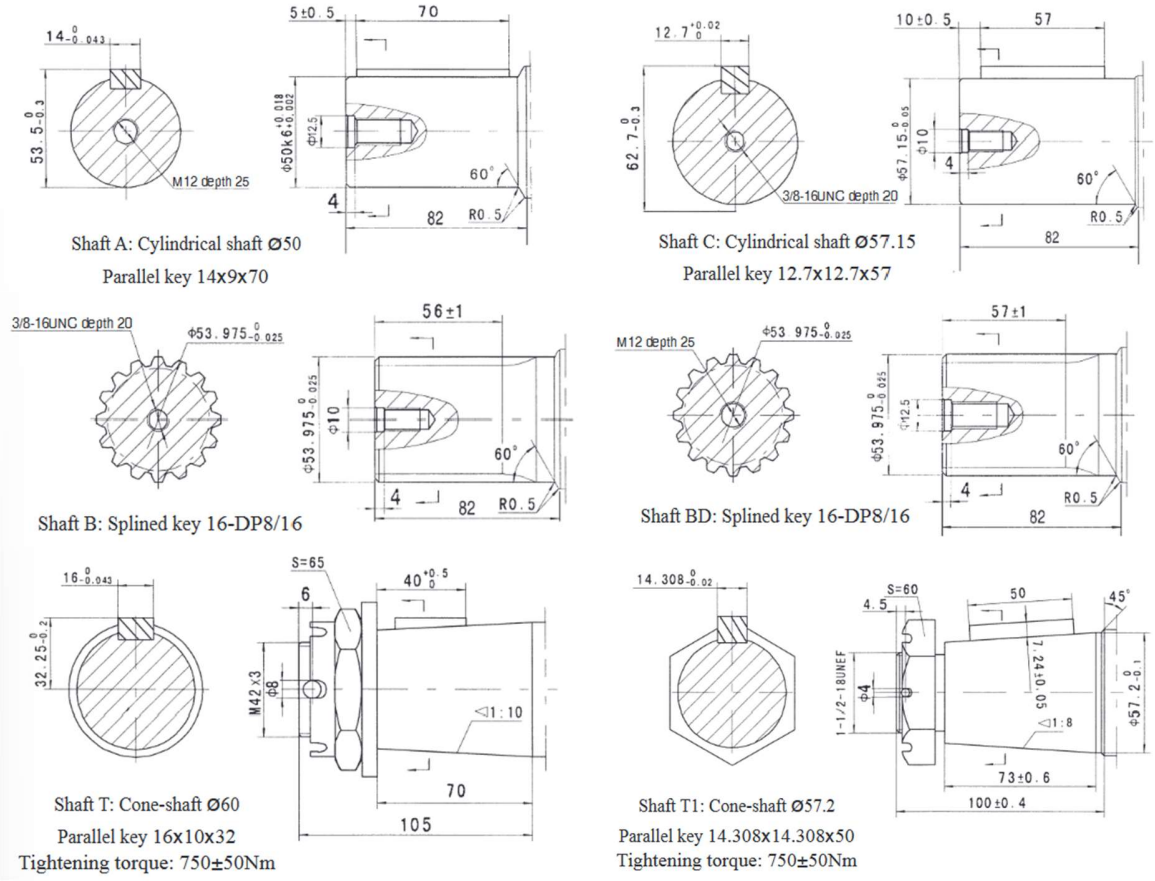


## Permissible shaft seal pressure

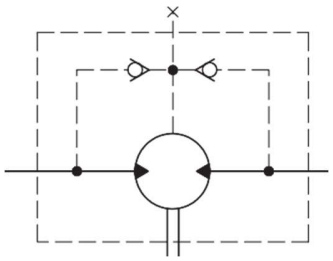

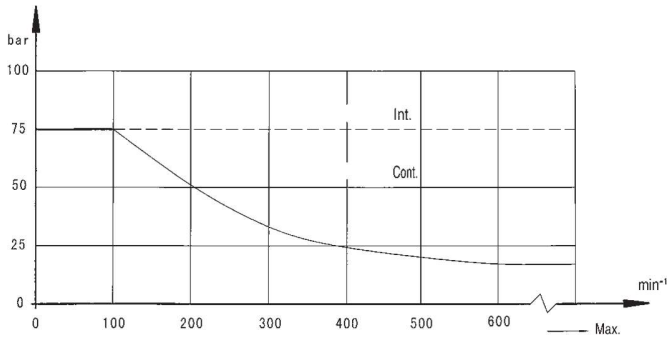

## *Standard direction of shaft rotation: Standard*

When facing shaft end of motor, shaft to rotate:

- Clockwise when port "A" is pressurized.

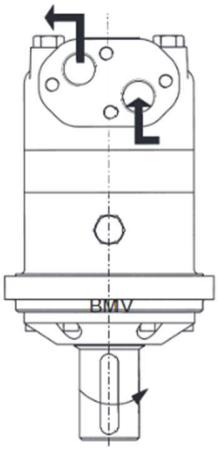


## *Oil flow in drain line*

The table shows the Max. oil flow in the drain line at a return pressure less than 0.5-1 MPa.

| *Pressure drop (MPa)* | *Viscosity ($mm^2/s$)* | *Oil flow in the drain line (L/min.)* |
|---|---|---|
| 14 | 20 | 3 |
| | 35 | 2 |
| 21 | 20 | 6 |
| | 35 | 4 |

In applications without drain line, output shaft seal exceeds a bit of the pressure in the return line. When applications use the drain line, the pressure of output shaft seal equals the pressure in drain line.

## *Axial and Radial forces*

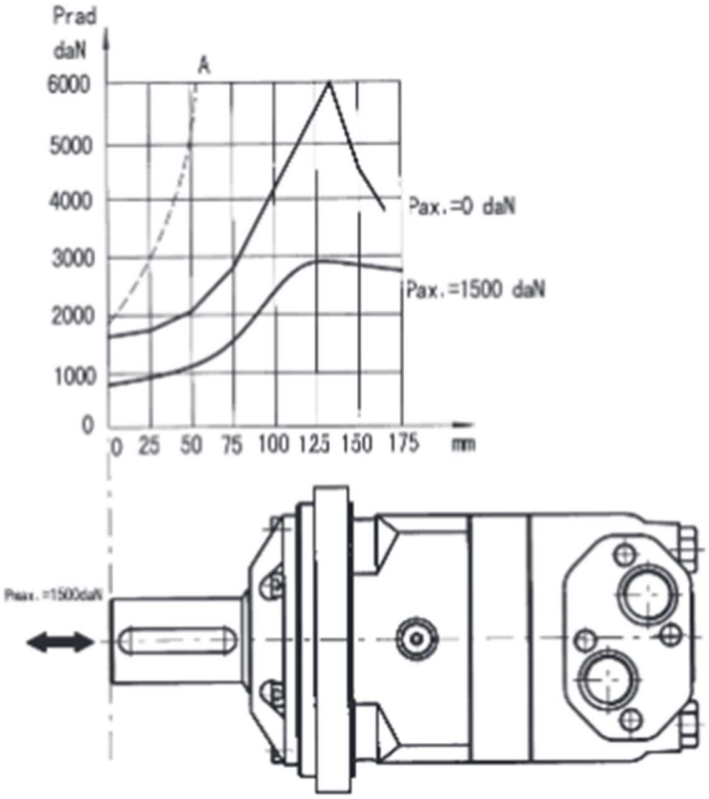


The output shaft runs in tapered bearings that permit high axial and radial forces, Curve "A" shows max radial shaft load. Any shaft loads exceeding the values quoted in the curve will involve a risk of breakage, The two other curves apply to a B10 bearing life of 3000 hours at 200 RPM.

# Order Information

FPMV 1 – 2 – 3 – 4 – 5 – 6 – 7 – 8

| Pos.1 | 2 | 3 | | 4 | | 5 | | 6 | | 7 | | 8 |
|---|---|---|---|---|---|---|---|---|---|---|---|---|
| Code | Displacement | Flange | | Output shaft | | Ports and drain port | | Rotation direction | | Paint | | Unusually function |
| Omit | 315 | 4 | 4-Ø18 Square-flange Ø200, pilot Ø160×11 | A | Shaft Ø50 , parallel key 14×9×70 | D | G1 Manifold 4×M12, G1/4 | Omit | Standard | 00 | No paint | Omit | Standard |
| | 400 | | | BD | Shaft Ø53.975, splined key 16-DP8/16 | M | M33×2 Manifold 4×M12, M14×1.5 | R | Opposite | Omit | Blue | | |
| | 500 | | | B | Shaft Ø53.975, splined key 16-DP8/16 | | 1-5/16-12UN, 9/16-18UNF | | | B | Black | | |
| | 630 | W | 4-Ø18 Wheel-flange Ø224, pilot Ø180×10 | C | Shaft Ø57.15, parallel key 12.7×12.7×57.15 | S | G1, G1/4 | | | S | Silver grey | | |
| | 800 | | | T | Cone shaft Ø60, parallel key 16×10×32 | G | M33×2, M14×1.5 | | | | | | |
| | 1000 | | | T1 | Cone shaft Ø57.2, parallel key 14.308×14.308×50.8 | M5 | 1-5/16-12UN | | | | | | |
| | | | | | | S1 | 7/16-20UNF | | | | | | |

Note:When the table is used, please fill the code of left rows in dash area and give us, which the code information is consists of construction, displacement, mounting flange, output shaft and ports. If the specification is not in the table or you have specific requirements, please contact us.

# FPMK2 SERIES HYDRAULIC MOTOR

FPMK2 new series motor adapt the advanced Geroler gear set designed with disc distribution flow and high pressure. The unit
can be supplied the individual variant in operating multifunction in accordance with requirement of applications.

***Characteristic featutres:***

- Advanced manufacturing devices for the Geroler gear set, which use low pressure of start-up, provide smooth and reliable operation and high efficiency.
- The output shaft adapts in tapered roller bearings that permit high axial and radial forces. The case can offers capacities of high pressure and high torque in the wide of applications.
- Advanced design in disc distribution flow, which can automatically compensate in operating with high volume efficiency and long life, provide smooth and reliable operation.
- The new series motor is suitable for vehicles with greater loads and pressure drop.

## *Main Specification*

| *Type* | | *FPMK 2 65* | *FPMK 2 80* | *FPMK 2 100* | *FPMK 2 125* | *FPMK 2 160* | *FPMK 2 200* | *FPMK 2 250* | *FPMK 2 315* | *FPMK 2 400* | *FPMK 2 475* |
|---|---|---|---|---|---|---|---|---|---|---|---|
| Displacement ($cm^3$/rev) | | 65 | 80 | 100.9 | 129.8 | 156.8 | 193.4 | 242.5 | 304.3 | 390.8 | 485 |
| Max. speed (rpm) | cont. | 835 | 800 | 742 | 576 | 477 | 385 | 308 | 246 | 191 | 153 |
| | int. | 990 | 980 | 924 | 720 | 713 | 577 | 462 | 365 | 287 | 230 |
| Max. torque (Nm) | cont. | 185 | 235 | 295 | 385 | 455 | 540 | 660 | 765 | 775 | 845 |
| | int. | 245 | 345 | 445 | 560 | 570 | 665 | 820 | 885 | 925 | 930 |
| Max. pressure drop (MPa) | cont. | 20.5 | 21 | 21 | 21 | 20.5 | 20.5 | 20.5 | 21 | 15.5 | 12 |
| | int. | 27.5 | 31 | 31 | 31 | 26 | 26 | 26 | 24 | 17 | 14 |
| | peak. | 31 | 31 | 31 | 31 | 31 | 31 | 31 | 31 | 20.5 | 17 |
| Max.flow (L/min) | cont. | 55 | 65 | 75 | 75 | 75 | 75 | 75 | 75 | 75 | 75 |
| | int. | 65 | 80 | 95 | 95 | 115 | 115 | 115 | 115 | 115 | 115 |
| Weight (kg) | | 9.2 | 9.4 | 9.7 | 10 | 10.2 | 10.5 | 11 | 11.5 | 12 | 12.4 |

- Continuous pressure: Max. value of operating motor continuously.
- Intermittent pressure: Max. value of operating motor in 6 seconds per minute.
- Peak pressure: Max. value of operating motor in 0.6 second per min.

FLUIDPARTS HYDRO-MOTORS

# *Performance Data*

## FPMK2 65 [65 cm³/rev]

Pressure (MPa) — Max.cont. Max.int. Peak

| Flow (L/min) | 3.5 | 7 | 10.5 | 14 | 17.5 | 20.5 | 24 | 27.5 | 31 |
|---|---|---|---|---|---|---|---|---|---|
| 2 | 28 | 54 | 80 | | | | | | |
| | **22** | **12** | **6** | | | | | | |
| 4 | 30 | 58 | 88 | 115 | 146 | 165 | **195** | | |
| | **52** | **47** | **43** | **35** | **30** | **24** | 16 | | |
| 8 | 31 | 60 | 92 | 120 | 150 | 170 | **200** | **225** | |
| | **107** | **98** | **92** | **85** | **70** | **55** | 40 | 30 | |
| 15 | 32 | 62 | 94 | 124 | 155 | 175 | **205** | **230** | **250** |
| | **214** | **208** | **200** | **193** | **185** | **174** | 160 | 145 | 130 |
| 22 | 32 | 65 | 95 | 125 | 157 | 178 | **206** | **232** | **254** |
| | **320** | **315** | **308** | **296** | **286** | **275** | 260 | 242 | 230 |
| 30 | 30 | 65 | 95 | 128 | 160 | 180 | **210** | **235** | **258** |
| | **445** | **440** | **430** | **420** | **408** | **395** | 380 | 360 | 325 |
| 38 | 28 | 62 | 95 | 130 | 165 | 185 | **216** | **240** | **260** |
| | **565** | **560** | **550** | **540** | **526** | **512** | 495 | 470 | 420 |
| 45 | 26 | 60 | 92 | 125 | 160 | 180 | **215** | **245** | **265** |
| | **675** | **670** | **660** | **648** | **632** | **615** | 600 | 580 | 530 |
| Max.cont. 55 | 23 | 55 | 88 | 120 | 155 | 175 | **210** | **235** | **255** |
| | **835** | **825** | **810** | **790** | **770** | **745** | 720 | 690 | 640 |
| Max.int. 65 | 20 | 50 | 84 | 112 | 150 | 170 | 205 | 230 | 250 |
| | **990** | **980** | **965** | **945** | **935** | **910** | **880** | **860** | **800** |

## FPMK2 80 [80 cm³/rev]

Pressure (MPa) — Max.cont. Max.int. Peak

| Flow (L/min) | 3.5 | 7 | 10.5 | 14 | 17.5 | 20.5 | 24 | 27.5 | 31 |
|---|---|---|---|---|---|---|---|---|---|
| 2 | 29 | 54 | 86 | | | | | | |
| | **18** | **9** | **3** | | | | | | |
| 4 | 35 | 75 | 112 | 145 | 172 | 208 | 218 | 236 | |
| | **45** | **41** | **38** | **35** | **28** | **22** | **14** | **3** | |
| 8 | 35 | 75 | 114 | 148 | 175 | 212 | 230 | 260 | 280 |
| | **90** | **85** | **80** | **76** | **72** | **64** | **55** | **46** | **40** |
| 15 | 38 | 78 | 116 | 152 | 184 | 215 | 245 | 275 | 300 |
| | **180** | **175** | **170** | **166** | **160** | **153** | **140** | **126** | **115** |
| 22 | 36 | 75 | 114 | 150 | 185 | 220 | 250 | 285 | 315 |
| | **265** | **260** | **255** | **250** | **242** | **234** | **220** | **205** | **185** |
| 30 | 35 | 75 | 115 | 150 | 185 | 225 | 260 | 295 | 325 |
| | **363** | **355** | **350** | **342** | **334** | **322** | **302** | **280** | **260** |
| 38 | 34 | 72 | 112 | 155 | 190 | 230 | 265 | 300 | 335 |
| | **460** | **452** | **442** | **430** | **418** | **405** | **385** | **360** | **335** |
| 45 | 32 | 70 | 110 | 150 | 190 | 230 | 265 | 305 | 340 |
| | **545** | **535** | **528** | **515** | **505** | **495** | **465** | **440** | **410** |
| 55 | 30 | 68 | 110 | 150 | 190 | 230 | 270 | 305 | 335 |
| | **670** | **660** | **650** | **635** | **620** | **605** | **575** | **540** | **510** |
| Max.cont. 65 | 25 | 65 | 105 | 145 | 180 | 225 | 260 | 295 | 325 |
| | **800** | **790** | **778** | **755** | **740** | **728** | **690** | **650** | **610** |
| 75 | 22 | 63 | 102 | 145 | 180 | 225 | 260 | 290 | |
| Max.int. | **910** | **900** | **880** | **860** | **850** | **830** | **790** | **750** | |
| 80 | 20 | 60 | 100 | 140 | 175 | 220 | 250 | | |
| | **980** | **970** | **955** | **920** | **900** | **875** | **840** | | |

## FPMK2 100 [100.9 cm³/rev]

Pressure ( MPa) — Max.cont. Max.int. Peak

| Flow (L/min) | 1.75 | 3.5 | 7 | 10.5 | 14 | 17.5 | 20.5 | 24 | 27.5 | 31 |
|---|---|---|---|---|---|---|---|---|---|---|
| 2 | 15 | 32 | 68 | | | | | | | |
| | **14** | **10** | **5** | | | | | | | |
| 4 | 18 | 42 | 92 | 130 | 170 | 205 | 230 | | | |
| | **36** | **34** | **32** | **28** | **22** | **14** | **5** | | | |
| 8 | 20 | 45 | 90 | 135 | 180 | 210 | 240 | 280 | 310 | |
| | **74** | **73** | **70** | **66** | **60** | **52** | **42** | **26** | **15** | |
| 15 | 20 | 45 | 90 | 135 | 185 | 220 | 260 | 305 | 345 | 390 |
| | **142** | **140** | **137** | **134** | **129** | **120** | **105** | **92** | **78** | **65** |
| 22 | 18 | 45 | 90 | 140 | 190 | 230 | 275 | 315 | 360 | 405 |
| | **210** | **207** | **201** | **195** | **188** | **179** | **160** | **150** | **138** | **125** |
| 30 | 16 | 42 | 88 | 142 | 195 | 240 | 285 | 330 | 375 | 425 |
| | **290** | **288** | **282** | **276** | **268** | **258** | **242** | **230** | **212** | **195** |
| 38 | 15 | 40 | 88 | 140 | 190 | 240 | 285 | 335 | 380 | 430 |
| | **370** | **365** | **360** | **352** | **340** | **326** | **310** | **295** | **275** | **255** |
| 45 | 15 | 40 | 86 | 140 | 190 | 240 | 285 | 340 | 385 | 440 |
| | **440** | **435** | **430** | **422** | **410** | **395** | **380** | **365** | **345** | **320** |
| 55 | 12 | 36 | 85 | 135 | 190 | 240 | 285 | 340 | 385 | 440 |
| | **540** | **534** | **528** | **520** | **510** | **500** | **485** | **465** | **440** | **405** |
| 65 | 10 | 35 | 80 | 130 | 185 | 235 | 280 | 335 | 380 | 440 |
| | **640** | **635** | **630** | **622** | **605** | **590** | **575** | **550** | **525** | **500** |
| Max.cont. 75 | 5 | 30 | 75 | 125 | 180 | 230 | 275 | 330 | 375 | |
| | **738** | **735** | **728** | **715** | **700** | **680** | **655** | **635** | **610** | |
| 85 | 3 | 25 | 75 | 125 | 175 | 225 | 270 | 320 | 370 | |
| Max.int. | **838** | **835** | **830** | **820** | **805** | **785** | **760** | **730** | **690** | |
| 95 | | 23 | 70 | 120 | 170 | 220 | 260 | 310 | | |
| | | **925** | **918** | **905** | **890** | **870** | **840** | **810** | | |

cont.
int.

## FPMK2 125 [129.8 cm³/rev]

Pressure ( MPa) — Max.cont. Max.int. Peak

| Flow (L/min) | 1.75 | 3.5 | 7 | 10.5 | 14 | 17.5 | 20.5 | 24 | 27.5 | 31 |
|---|---|---|---|---|---|---|---|---|---|---|
| 2 | 25 | 40 | | | | | | | | |
| | **12** | **7** | | | | | | | | |
| 4 | 28 | 55 | 110 | 175 | 220 | 280 | 325 | | | |
| | **27** | **26** | **22** | **18** | **14** | **11** | **8** | | | |
| 8 | 28 | 60 | 115 | 175 | 230 | 290 | 330 | 375 | 400 | |
| | **57** | **56** | **53** | **48** | **42** | **38** | **34** | **26** | **20** | |
| 15 | 28 | 60 | 120 | 180 | 240 | 295 | 340 | 390 | 440 | 485 |
| | **113** | **112** | **110** | **105** | **98** | **92** | **86** | **80** | **72** | **65** |
| 22 | 28 | 55 | 120 | 180 | 245 | 305 | 360 | 415 | 470 | 530 |
| | **165** | **163** | **160** | **155** | **150** | **144** | **138** | **130** | **115** | **100** |
| 30 | 25 | 52 | 120 | 185 | 245 | 310 | 365 | 425 | 480 | 545 |
| | **228** | **224** | **222** | **210** | **212** | **206** | **198** | **188** | **178** | **165** |
| 38 | 25 | 50 | 120 | 180 | 245 | 315 | 370 | 430 | 495 | 550 |
| | **288** | **285** | **282** | **275** | **268** | **260** | **252** | **242** | **230** | **215** |
| 45 | 22 | 50 | 120 | 180 | 245 | 315 | 370 | 430 | 490 | 550 |
| | **345** | **343** | **338** | **332** | **325** | **315** | **305** | **292** | **280** | **265** |
| 55 | 20 | 46 | 115 | 175 | 245 | 330 | 375 | 430 | 490 | |
| | **420** | **418** | **414** | **408** | **400** | **390** | **378** | **365** | **346** | |
| 65 | 15 | 43 | 110 | 170 | 240 | 320 | 370 | 425 | 485 | |
| | **498** | **496** | **492** | **486** | **480** | **465** | **458** | **440** | **425** | |
| Max.cont. 75 | 12 | 42 | 108 | 170 | 235 | 310 | 365 | 425 | | |
| | **575** | **574** | **568** | **560** | **550** | **548** | **525** | **502** | | |
| 85 | 8 | 40 | 105 | 165 | 230 | 310 | 360 | 420 | | |
| Max.int. | **653** | **652** | **645** | **636** | **625** | **616** | **600** | **578** | | |
| 95 | | 40 | 100 | 160 | 225 | 290 | 355 | 415 | | |
| | | **722** | **715** | **702** | **690** | **680** | **670** | **655** | | |

Torque (N•m) 225
Speed (rpm) 690

## FPMK2 160 [156.8 cm³/rev]

## FPMK2 200 [193.4 cm³/rev]

Pressure ( MPa)

| Flow (L/min) | 1.75 | 3.5 | 7 | 10.5 | 14 | 17.5 | Max.cont. 20.5 | 24 | Max.int. 26 |
|---|---|---|---|---|---|---|---|---|---|
| 2 | 28<br>**9** | 55<br>**7** | 110<br>**5** | 175<br>**3** | | | | | |
| 4 | 32<br>**22** | 63<br>**21** | 125<br>**19** | 190<br>**17** | 250<br>**13** | 315<br>**8** | 370<br>**3** | | |
| 8 | 37<br>**47** | 68<br>**45** | 130<br>**42** | 200<br>**39** | 260<br>**36** | 325<br>**34** | 390<br>**32** | 450<br>**27** | 480<br>**22** |
| 15 | 35<br>**93** | 68<br>**92** | 135<br>**89** | 210<br>**85** | 275<br>**80** | 370<br>**76** | 420<br>**70** | 500<br>**60** | 530<br>**45** |
| 22 | 35<br>**138** | 75<br>**136** | 140<br>**133** | 215<br>**128** | 285<br>**122** | 370<br>**116** | 440<br>**110** | 515<br>**102** | 550<br>**95** |
| 30 | 35<br>**190** | 75<br>**187** | 145<br>**184** | 220<br>**178** | 290<br>**172** | 370<br>**167** | 440<br>**164** | 520<br>**154** | 560<br>**142** |
| 38 | 37<br>**240** | 70<br>**237** | 150<br>**234** | 225<br>**230** | 310<br>**225** | 380<br>**218** | 450<br>**202** | 525<br>**193** | 565<br>**185** |
| 45 | 32<br>**285** | 70<br>**283** | 150<br>**280** | 225<br>**275** | 310<br>**268** | 380<br>**259** | 450<br>**247** | 525<br>**236** | 565<br>**225** |
| 55 | 28<br>**348** | 66<br>**346** | 145<br>**242** | 220<br>**338** | 305<br>**332** | 375<br>**324** | 450<br>**314** | 525<br>**300** | |
| 65 | 25<br>**412** | 63<br>**410** | 140<br>**406** | 220<br>**400** | 300<br>**393** | 375<br>**383** | 445<br>**370** | | |
| Max.cont. 75 | 22<br>**476** | 60<br>**474** | 135<br>**470** | 215<br>**464** | 295<br>**454** | 370<br>**445** | 440<br>**435** | | |
| 85 | 18<br>**540** | 55<br>**536** | 130<br>**532** | 210<br>**524** | 290<br>**514** | 365<br>**502** | 435<br>**485** | | |
| Max.int. 95 | 15<br>**600** | 50<br>**595** | 125<br>**590** | 205<br>**580** | 285<br>**565** | 360<br>**555** | 430<br>**545** | | |
| 115 | | 40<br>**715** | 115<br>**705** | 200<br>**695** | 280<br>**685** | 350<br>**670** | 425<br>**655** | | |

Pressure ( MPa)

| Flow (L/min) | 1.75 | 3.5 | 7 | 10.5 | 14 | 17.5 | Max.cont. 20.5 | 24 | Max.int. 26 |
|---|---|---|---|---|---|---|---|---|---|
| 2 | 32<br>**9** | 68<br>**7** | 110<br>**5** | 145<br>**3** | | | | | |
| 4 | 40<br>**18** | 75<br>**16** | 150<br>**14** | 195<br>**11** | 300<br>**7** | 360<br>**4** | | | |
| 8 | 45<br>**37** | 80<br>**36** | 160<br>**34** | 240<br>**30** | 315<br>**26** | 405<br>**21** | 500<br>**17** | 570<br>**13** | 600<br>**11** |
| 15 | 48<br>**75** | 90<br>**74** | 170<br>**72** | 255<br>**68** | 335<br>**64** | 425<br>**60** | 510<br>**56** | 590<br>**50** | 620<br>**42** |
| 22 | 46<br>**112** | 90<br>**110** | 175<br>**108** | 265<br>**105** | 350<br>**101** | 440<br>**97** | 520<br>**91** | 605<br>**86** | 645<br>**80** |
| 30 | 45<br>**153** | 90<br>**151** | 180<br>**148** | 270<br>**145** | 360<br>**141** | 450<br>**135** | 530<br>**128** | 615<br>**122** | 655<br>**116** |
| 38 | 45<br>**193** | 90<br>**191** | 180<br>**188** | 275<br>**184** | 370<br>**178** | 455<br>**172** | 540<br>**166** | 625<br>**158** | |
| 45 | 40<br>**230** | 85<br>**228** | 180<br>**226** | 275<br>**222** | 370<br>**218** | 460<br>**210** | 545<br>**202** | | |
| 55 | 38<br>**280** | 82<br>**278** | 180<br>**275** | 275<br>**270** | 375<br>**264** | 465<br>**255** | 550<br>**248** | | |
| 65 | 35<br>**332** | 80<br>**330** | 175<br>**328** | 270<br>**322** | 370<br>**315** | 465<br>**306** | 545<br>**295** | | |
| Max.cont. 75 | 30<br>**384** | 72<br>**382** | 170<br>**378** | 265<br>**370** | 360<br>**365** | 455<br>**356** | 540<br>**346** | | |
| 85 | 25<br>**436** | 70<br>**434** | 165<br>**430** | 260<br>**420** | 355<br>**410** | 450<br>**400** | 540<br>**390** | | |
| Max.int. 95 | 20<br>**488** | 60<br>**485** | 155<br>**478** | 255<br>**470** | 350<br>**458** | 445<br>**448** | 530<br>**438** | | |
| 115 | | 50<br>**580** | 140<br>**572** | 240<br>**562** | 330<br>**550** | 440<br>**538** | 520<br>**520** | | |

## FPMK2 250 [242.5 cm³/rev]

Pressure ( MPa)

| Flow (L/min) | 1.75 | 3.5 | 7 | 10.5 | 14 | 17.5 | Max.cont. 20.5 | 24 | Max.int. 26 |
|---|---|---|---|---|---|---|---|---|---|
| 2 | 45<br>**4** | 95<br>**2** | | | | | | | |
| 4 | 50<br>**14** | 100<br>**13** | 210<br>**11** | 310<br>**9** | 410<br>**6** | 510<br>**4** | 610<br>**3** | | |
| 8 | 55<br>**29** | 105<br>**28** | 215<br>**26** | 320<br>**23** | 420<br>**20** | 530<br>**17** | 620<br>**14** | 730<br>**11** | 780<br>**9** |
| 15 | 55<br>**59** | 110<br>**58** | 220<br>**56** | 330<br>**53** | 440<br>**50** | 550<br>**47** | 650<br>**45** | 755<br>**43** | 810<br>**40** |
| 22 | 50<br>**88** | 115<br>**87** | 225<br>**85** | 340<br>**82** | 455<br>**78** | 560<br>**74** | 665<br>**69** | 770<br>**65** | |
| 30 | 50<br>**122** | 115<br>**121** | 230<br>**118** | 350<br>**113** | 465<br>**109** | 570<br>**104** | 680<br>**100** | 785<br>**92** | |
| 38 | 48<br>**154** | 112<br>**152** | 235<br>**149** | 355<br>**145** | 475<br>**140** | 580<br>**135** | 695<br>**130** | 795<br>**122** | |
| 45 | 45<br>**183** | 110<br>**182** | 230<br>**180** | 350<br>**176** | 475<br>**170** | 590<br>**165** | 700<br>**158** | | |
| 55 | 42<br>**224** | 105<br>**223** | 230<br>**221** | 345<br>**218** | 470<br>**212** | 580<br>**205** | | | |
| 65 | 35<br>**266** | 100<br>**265** | 220<br>**263** | 340<br>**258** | 460<br>**252** | 565<br>**242** | | | |
| Max.cont. 75 | 32<br>**307** | 95<br>**306** | 210<br>**303** | 330<br>**298** | 455<br>**290** | 560<br>**280** | | | |
| 85 | 30<br>**348** | 85<br>**346** | 200<br>**342** | 320<br>**336** | 450<br>**330** | 555<br>**320** | | | |
| Max.int. 95 | 25<br>**386** | 70<br>**384** | 190<br>**378** | 315<br>**372** | 440<br>**365** | 540<br>**355** | | | |
| 115 | | 65<br>**465** | 180<br>**458** | 300<br>**450** | 430<br>**442** | | | | |

cont.
int.

## FPMK2 315 [304.3 cm³/rev]

Pressure ( MPa)

| Flow (L/min) | 1.75 | 3.5 | 7 | 10.5 | 14 | 17.5 | Max.cont. 20.5 | Max.int. 24 |
|---|---|---|---|---|---|---|---|---|
| 2 | 45<br>**4** | 95<br>**2** | | | | | | |
| 4 | 65<br>**12** | 130<br>**11** | 250<br>**10** | 380<br>**8** | 490<br>**6** | | | |
| 8 | 70<br>**24** | 135<br>**23** | 260<br>**22** | 390<br>**20** | 510<br>**18** | 630<br>**15** | 760<br>**10** | 875<br>**6** |
| 15 | 75<br>**48** | 140<br>**48** | 275<br>**47** | 410<br>**45** | 535<br>**42** | 670<br>**38** | 800<br>**34** | 920<br>**30** |
| 22 | 70<br>**71** | 140<br>**70** | 285<br>**69** | 425<br>**66** | 555<br>**62** | 685<br>**56** | 810<br>**50** | 940<br>**42** |
| 30 | 70<br>**97** | 145<br>**97** | 290<br>**96** | 430<br>**93** | 565<br>**88** | 695<br>**80** | 820<br>**70** | |
| 38 | 66<br>**123** | 140<br>**122** | 290<br>**120** | 435<br>**117** | 570<br>**112** | 715<br>**102** | 835<br>**90** | |
| 45 | 62<br>**147** | 135<br>**146** | 290<br>**144** | 435<br>**142** | 575<br>**135** | 720<br>**125** | 840<br>**118** | |
| 55 | 58<br>**180** | 130<br>**179** | 285<br>**176** | 430<br>**172** | 575<br>**165** | 720<br>**155** | | |
| 65 | 52<br>**213** | 120<br>**212** | 275<br>**210** | 425<br>**205** | 570<br>**200** | 715<br>**190** | | |
| Max.cont. 75 | 40<br>**246** | 110<br>**245** | 260<br>**242** | 415<br>**236** | 560<br>**225** | 710<br>**212** | | |
| 85 | 30<br>**278** | 100<br>**277** | 250<br>**274** | 405<br>**270** | 540<br>**260** | | | |
| Max.int. 95 | 20<br>**311** | 90<br>**310** | 245<br>**307** | 380<br>**303** | 515<br>**296** | | | |
| 115 | | 80<br>**365** | 225<br>**361** | 350<br>**355** | | | | |

Torque (N•m) 225
Speed (rpm) **361**

FLUIDPARTS HYDRO-MOTORS

## FPMK2 400 [390.8 cm³/rev]

Pressure ( MPa)

| Flow (L/min) | 1.75 | 3.5 | 7 | 10.5 | 14 | 15.5 Max.cont. | 17.5 Max.int. | 19 |
|---|---|---|---|---|---|---|---|---|
| 2 | 70<br>**4** | 145<br>**2** | | | | | | |
| 4 | 80<br>**9** | 170<br>**9** | 345<br>**8** | 500<br>**7** | 660<br>**6** | 740<br>**5** | | |
| 8 | 85<br>**19** | 175<br>**18** | 355<br>**17** | 520<br>**16** | 680<br>**14** | 765<br>**13** | 830<br>**12** | 910<br>**10** |
| 15 | 90<br>**37** | 185<br>**37** | 370<br>**36** | 550<br>**35** | 720<br>**32** | 810<br>**30** | 880<br>**28** | |
| 22 | 95<br>**55** | 190<br>**55** | 380<br>**54** | 565<br>**52** | 750<br>**48** | 830<br>**46** | 900<br>**44** | |
| 30 | 92<br>**76** | 188<br>**75** | 385<br>**73** | 570<br>**71** | 760<br>**68** | 835<br>**65** | 905<br>**62** | |
| 38 | 90<br>**96** | 185<br>**94** | 385<br>**92** | 575<br>**90** | 765<br>**86** | 840<br>**84** | 930<br>**80** | |
| 45 | 85<br>**114** | 180<br>**113** | 380<br>**111** | 570<br>**108** | 760<br>**102** | | | |
| 55 | 80<br>**140** | 175<br>**139** | 380<br>**137** | 570<br>**133** | 760<br>**127** | | | |
| 65 | 75<br>**165** | 170<br>**164** | 370<br>**163** | 560<br>**160** | 750<br>**155** | | | |
| Max.cont. 75 | 68<br>**191** | 160<br>**190** | 360<br>**188** | 555<br>**184** | 740<br>**178** | | | |
| 85 | 65<br>**214** | 150<br>**212** | 355<br>**210** | 550<br>**206** | 730<br>**200** | | | |
| Max.int. 95 | 50<br>**242** | 135<br>**240** | 340<br>**237** | 530<br>**233** | 710<br>**228** | | | |
| 115 | | 125<br>**286** | 310<br>**282** | 510<br>**275** | | | | |

cont.
int.

## FPMK2 475 [485 cm³/rev]

Pressure ( MPa)

| Flow (L/min) | 1.75 | 3.5 | 7 | 10.5 | 12 Max.cont. | 14 Max.int. |
|---|---|---|---|---|---|---|
| 2 | 75<br>**2** | 175<br>**1** | | | | |
| 4 | 110<br>**7** | 220<br>**6** | 430<br>**4** | 540<br>**1** | | |
| 8 | 110<br>**14** | 225<br>**13** | 450<br>**11** | 700<br>**7** | | |
| 15 | 105<br>**29** | 235<br>**28** | 470<br>**26** | 710<br>**24** | 825<br>**22** | 895<br>**19** |
| 22 | 105<br>**44** | 240<br>**43** | 480<br>**42** | 720<br>**40** | 835<br>**37** | 915<br>**34** |
| 30 | 110<br>**61** | 240<br>**60** | 485<br>**58** | 725<br>**55** | 840<br>**52** | 935<br>**48** |
| 38 | 110<br>**77** | 235<br>**75** | 480<br>**73** | 720<br>**70** | 840<br>**68** | 930<br>**65** |
| 45 | 100<br>**91** | 220<br>**91** | 470<br>**89** | 715<br>**85** | 825<br>**83** | |
| 55 | 95<br>**112** | 210<br>**110** | 460<br>**108** | 710<br>**104** | 820<br>**100** | |
| 65 | 85<br>**132** | 200<br>**131** | 445<br>**128** | 700<br>**125** | 810<br>**120** | |
| Max.cont. 75 | 70<br>**153** | 185<br>**152** | 440<br>**149** | 690<br>**145** | 800<br>**140** | |
| 85 | 60<br>**173** | 175<br>**172** | 430<br>**169** | 680<br>**165** | 785<br>**160** | |
| Max.int. 95 | 40<br>**195** | 150<br>**193** | 405<br>**190** | 655<br>**185** | | |
| 115 | | 130<br>**230** | 380<br>**226** | 625<br>**220** | | |

Torque (N•m) 130
Speed (rpm) **230**

# FPMK2 - DIMENSIONS AND MOUNTING DATA

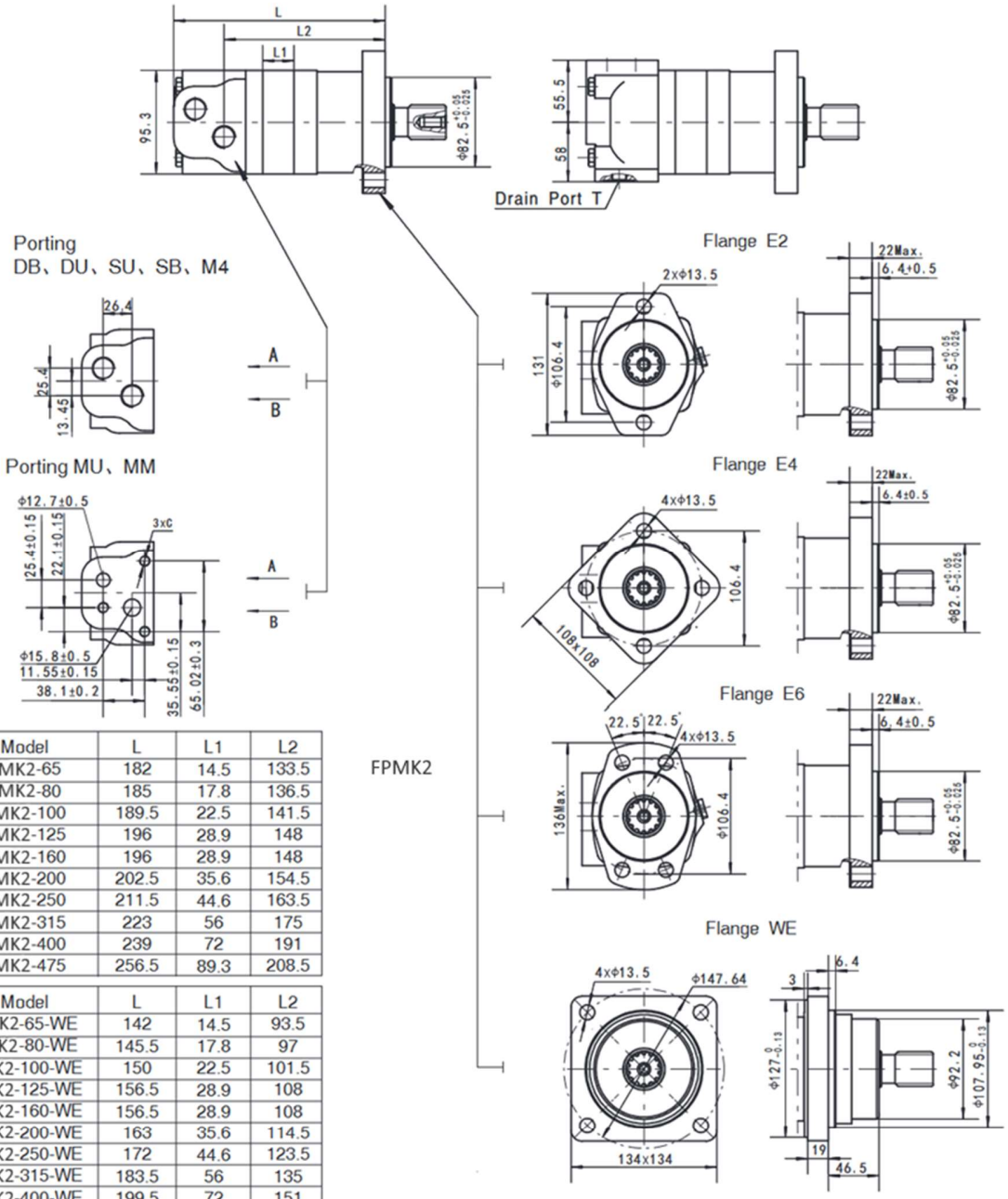


| Model | L | L1 | L2 |
|---|---|---|---|
| FPMK2-65 | 182 | 14.5 | 133.5 |
| FPMK2-80 | 185 | 17.8 | 136.5 |
| FPMK2-100 | 189.5 | 22.5 | 141.5 |
| FPMK2-125 | 196 | 28.9 | 148 |
| FPMK2-160 | 196 | 28.9 | 148 |
| FPMK2-200 | 202.5 | 35.6 | 154.5 |
| FPMK2-250 | 211.5 | 44.6 | 163.5 |
| FPMK2-315 | 223 | 56 | 175 |
| FPMK2-400 | 239 | 72 | 191 |
| FPMK2-475 | 256.5 | 89.3 | 208.5 |

| Model | L | L1 | L2 |
|---|---|---|---|
| FPMK2-65-WE | 142 | 14.5 | 93.5 |
| FPMK2-80-WE | 145.5 | 17.8 | 97 |
| FPMK2-100-WE | 150 | 22.5 | 101.5 |
| FPMK2-125-WE | 156.5 | 28.9 | 108 |
| FPMK2-160-WE | 156.5 | 28.9 | 108 |
| FPMK2-200-WE | 163 | 35.6 | 114.5 |
| FPMK2-250-WE | 172 | 44.6 | 123.5 |
| FPMK2-315-WE | 183.5 | 56 | 135 |
| FPMK2-400-WE | 199.5 | 72 | 151 |
| FPMK2-475-WE | 217 | 89.3 | 168.5 |

| Code / Mounting | DB (Depth) | DU (Depth) | SU (Depth) | SB (Depth) | M4 (Depth) | MU | MM |
|---|---|---|---|---|---|---|---|
| P(A,B) | G1/2 (15) | G1/2 (15) | 7/8-14 O-ring (17) | 7/8-14 O-ring (17) | M22 x 1.5 (15) | Φ12.7、Φ15.8 | Φ12.7、Φ15.8 |
| T | G1/4 (12) | 7/16-20UNF(12) | 7/16-20UNF(12) | G1/4 (12) | M14 x 1.5 (12) | 7/16-20UNF(12) | G1/4 (12) |
| C | -- | | | | | 3/8-16UNC(15) | M10(15) |

# SHAFT EXTENSIONS FOR FPMK2 MOTORS

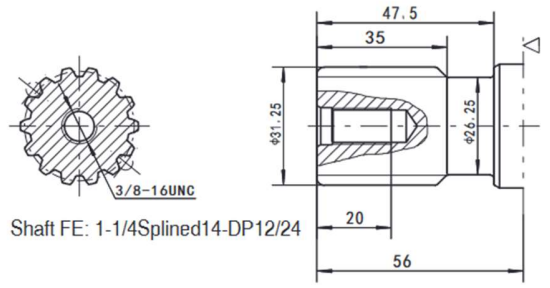


Shaft FE: 1-1/4Splined14-DP12/24

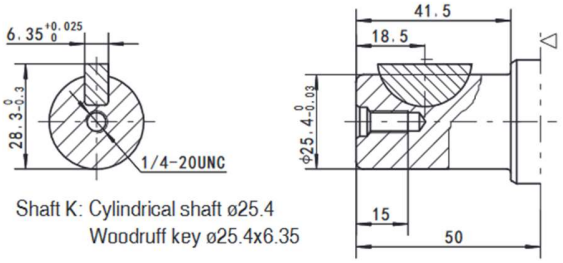


Shaft K: Cylindrical shaft ø25.4
Woodruff key ø25.4x6.35

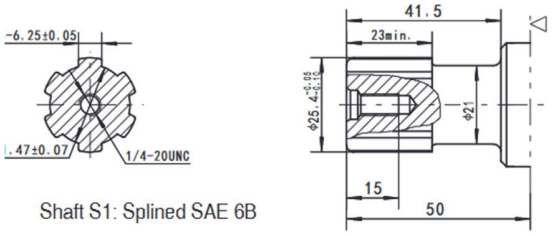


Shaft S1: Splined SAE 6B

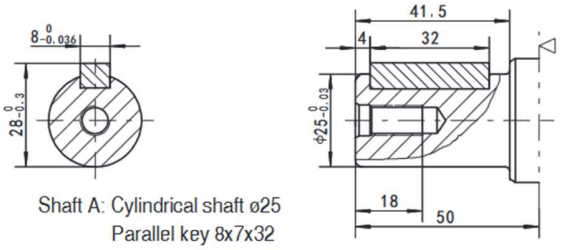


Shaft A: Cylindrical shaft ø25
Parallel key 8x7x32

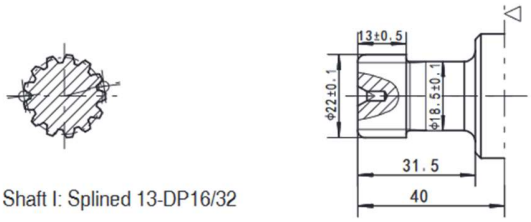


Shaft I: Splined 13-DP16/32

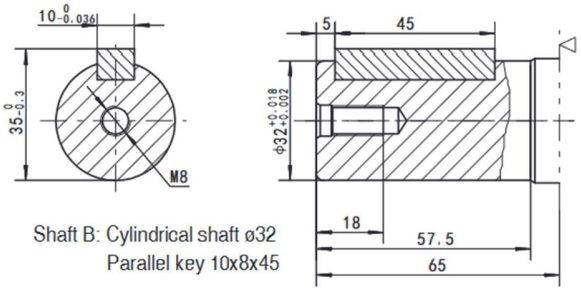


Shaft B: Cylindrical shaft ø32
Parallel key 10x8x45

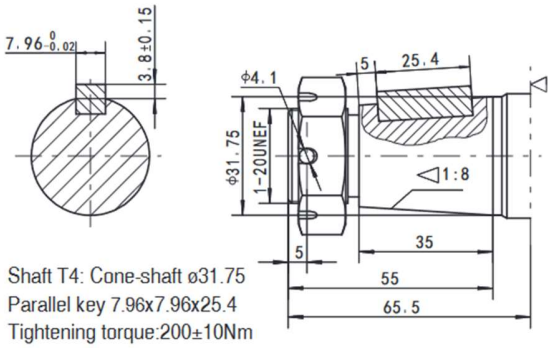


Shaft T4: Cone-shaft ø31.75
Parallel key 7.96x7.96x25.4
Tightening torque:200±10Nm

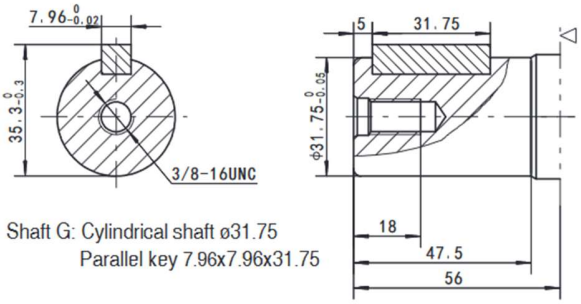


Shaft G: Cylindrical shaft ø31.75
Parallel key 7.96x7.96x31.75

◁ Motor Mounting Surface E2 Flange

## *Permissible shaft seal pressure*

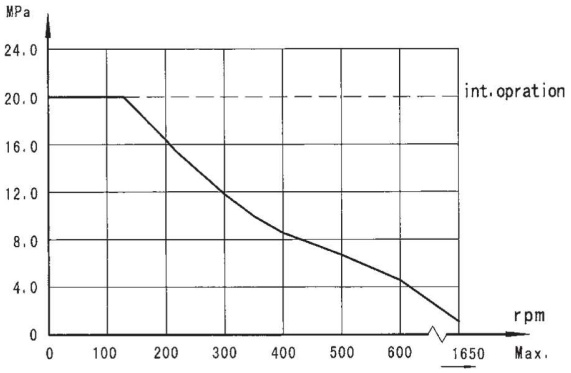


## *Direction of shaft rotation: Standard*

When facing shaft end of motor,shaft to rotate:

- Clockwise when port “A” is pressurized.
- Counter-clockwise when port “B” is pressurized.

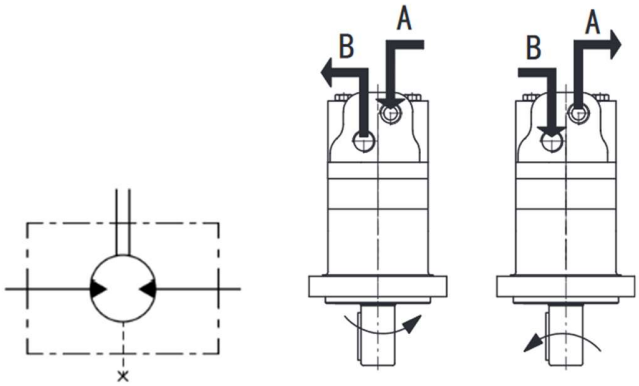

## *FPMK2 Standard Mounting Flange[E2] Radial Forces*

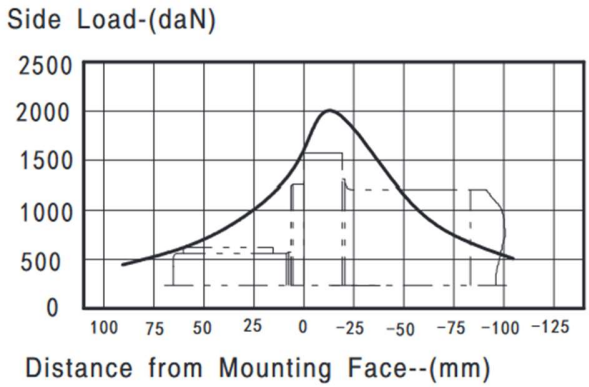


The bearing curve represents allowable bearing loads for an $B_{10}$ bearing life (2000 hours or $12x10^6$ revolutions at 100rpm) at rated output torque.

# Order *Information*

FPMK2 | 1 | 2 | 3 | 4 | 5 | 6 | 7 | 8

| Pos.1 | 2 | 3 | | 4 | | 5 | | 6 | | 7 | | 8 | |
|---|---|---|---|---|---|---|---|---|---|---|---|---|---|
| Code | Disp. | Flange | | Output Shaft | | Port and Drain Port | | Rotation Direction | | Paint | | Unusually Function | |
| | 65 | | | A | Shaft Φ25 , parllel key 8x7x32 | | | Omit | Standard | | | | |
| | 80 | E2 | 2×Φ13.5 Rhomb-flange Φ106.4, pilot Φ82.5x6.4 | B | Shaft Φ32 , parllel key 10x8x45 | | | R | Opposite | | | | |
| | 100 | | | K | Shaft Φ25.4 , Woodruff key Φ25.4x6.35 | DB | G1/2,G1/4 | | | 00 | No paint | Omit | Standard |
| | 125 | E4 | 4×Φ13.5 Rhomb-flange Φ106.4, pilot Φ82.5x6.4 | G | Shaft Φ31.75 , parllel key 7.96x7.96x31.75 | DU | G1/2,7/16-20 UNF | | | Omit | Blue | F | Free Running |
| | 160 | | | | | SB | 7/8-14UNF O-ring,G1/4 | | | B | Black | | |
| | 200 | E6 | 4×Φ13.5 Rhomb-flange Φ106.4, pilot Φ82.5x6.4 | FE | Shaft Φ31.75 , splined 14-DP12/24 | SU | 7/8-14UNF O-ring,7/16-20 UNF | | | S | Silver grey | | |
| | 250 | | | | | M4 | M22×1.5,M14×1.5 | | | | | | |
| | 315 | WE | 4×Φ13.6Wheel-flange Φ147.6, pilot Φ107.95x6.4 | S1 | Shaft Φ25.4 ,splined SAE 6B | MU | 1/2",5/8"Crosshole Manifold 3×3/8-16UNC,7/16-20UNF | | | | | | |
| | 400 | | | I | Sub-shaft Φ22 , splined 13-DP16/32 | MM | 1/2",5/8"Crosshole Manifold 3×M10,G1/4 | | | | | | |
| | 475 | | | T4 | Cone-shaft Φ31.75 , parllel key 7.96x7.96x25.4 | | | | | | | | |

Note: When the table is used , please fill the code of right rows in the table and give us , which the code information is consists of construction , displacement , mounting flange , output shaft and ports . If the specification is not in the table or you have specific requirements , please contact us .

# FPMK6 SERIES HYDRAULIC MOTOR

FPMK6 series motor adapt the advanced Geroler gear set designed with disc distribution flow and high pressure. The unit can
be supplied the individual variant in operating multifunction in accordance with requirement of applications.

*Characteristic features:*

- Advanced manufacturing devices for the Geroler gear set, which use low pressure of start-up, provide smooth and reliable.
- operation and high efficiency.
- Advanced design in disc distribution flow, which can automatically compensate in operating with high volume efficiency and long life ,provide smooth and reliable operation.
- Shaft seal can bear high pressure of back.
- The output shaft adapts in tapered roller bearings that permit high axial and radial forces. The case can offers capacities of high pressure and high torque in the wide of applications.

## *Main Specification*

| *Type* | | *FPMK 6 200* | *FPMK 6 250* | *FPMK 6 315* | *FPMK 6 400* | *FPMK 6 500* | *FPMK 6 630* | *FPMK 6 800* | *FPMK 6 1000* |
|---|---|---|---|---|---|---|---|---|---|
| Displacement (cm³/rev) | | 195.6 | 246.1 | 311.6 | 391.3 | 490.8 | 623 | 802.4 | 981.6 |
| Max. speed (rpm) | cont. | 765 | 610 | 480 | 382 | 304 | 240 | 186 | 152 |
| | int. | 865 | 830 | 690 | 570 | 455 | 360 | 280 | 230 |
| Max. torque (Nm) | cont. | 565 | 710 | 920 | 1160 | 1445 | 1480 | 1580 | 1675 |
| | int. | 840 | 1080 | 1325 | 1625 | 1880 | 1890 | 1880 | 1860 |
| Max. pressure drop (MPa) | cont. | 20 | 20 | 20 | 20 | 20 | 17.5 | 14 | 14 |
| | int. | 30 | 30 | 30 | 30 | 27.5 | 22.5 | 15.5 | 14 |
| | peak. | 30 | 30 | 30 | 30 | 30 | 24 | 17.5 | 17 |
| Max.flow (L/min) | cont. | 150 | 150 | 150 | 150 | 150 | 150 | 150 | 150 |
| | int. | 170 | 205 | 225 | 225 | 225 | 225 | 225 | 225 |
| Weight (kg) | | 26.3 | 26.8 | 27.3 | 28 | 28.8 | 29.6 | 30.5 | 32 |

- Continuous pressure: Max. value of operating motor continuously.
- Intermittent pressure: Max. value of operating motor in 6 seconds per minute.
- Peak pressure: Max. value of operating motor in 0.6 second per minute.

FLUIDPARTS HYDRO-MOTORS

# *Performance Data*

## FPMK6 200 [195.6 cm³/rev]

Pressure (MPa)

| Flow (L/min) | 1.75 | 3.5 | 7 | 10.5 | 14 | 17.5 | 20 (Max.cont.) | 24 | 27.5 (Max.int.) | 30 (Peak) |
|---|---|---|---|---|---|---|---|---|---|---|
| 2 | 30<br>**9** | 73<br>**7** | 160<br>**5** | | | | | | | |
| 8 | 36<br>**39** | 76<br>**38** | 168<br>**35** | 262<br>**34** | 345<br>**31** | 438<br>**27** | 465<br>**16** | | | |
| 15 | 36<br>**75** | 81<br>**75** | 174<br>**74** | 270<br>**71** | 365<br>**65** | 455<br>**60** | 510<br>**45** | 580<br>**32** | 640<br>**16** | |
| 30 | 37<br>**152** | 85<br>**151** | 175<br>**147** | 275<br>**142** | 370<br>**132** | 465<br>**121** | 540<br>**109** | 615<br>**96** | 700<br>**80** | 765<br>**60** |
| 45 | 37<br>**228** | 85<br>**227** | 180<br>**223** | 280<br>**218** | 375<br>**210** | 470<br>**200** | 535<br>**185** | 650<br>**165** | 740<br>**146** | 805<br>**110** |
| 60 | 38<br>**305** | 80<br>**304** | 178<br>**302** | 282<br>**297** | 380<br>**288** | 475<br>**280** | 565<br>**255** | 660<br>**235** | 750<br>**210** | 825<br>**170** |
| 75 | 32<br>**382** | 78<br>**380** | 175<br>**376** | 275<br>**370** | 378<br>**362** | 480<br>**350** | 565<br>**328** | 670<br>**300** | 760<br>**270** | 840<br>**230** |
| 90 | 26<br>**459** | 75<br>**456** | 172<br>**452** | 270<br>**445** | 375<br>**436** | 475<br>**420** | 565<br>**405** | 660<br>**383** | 765<br>**355** | |
| 105 | 22<br>**536** | 70<br>**534** | 170<br>**530** | 270<br>**523** | 370<br>**510** | 470<br>**496** | 560<br>**470** | 660<br>**435** | 760<br>**400** | |
| 120 | 20<br>**612** | 67<br>**610** | 166<br>**605** | 265<br>**598** | 365<br>**585** | 465<br>**570** | 560<br>**536** | 660<br>**502** | 755<br>**450** | |
| 135 | 14<br>**690** | 65<br>**687** | 160<br>**680** | 260<br>**672** | 360<br>**650** | 465<br>**638** | 560<br>**595** | 655<br>**550** | 750<br>**485** | |
| 150 (Max.cont.) | 10<br>**765** | 60<br>**765** | 155<br>**755** | 258<br>**740** | 356<br>**725** | 450<br>**700** | 550<br>**640** | 650<br>**580** | | |
| 170 (Max.int.) | | 60<br>**865** | 155<br>**850** | 255<br>**840** | 350<br>**820** | 450<br>**800** | 545<br>**745** | 640<br>**700** | | |

## FPMK6 250 [246.1 cm³/rev]

Pressure (MPa)

| Flow (L/min) | 1.75 | 3.5 | 7 | 10.5 | 14 | 17.5 | 20 (Max.cont.) | 24 | 27.5 (Max.int.) | 30 (Peak) |
|---|---|---|---|---|---|---|---|---|---|---|
| 2 | 46<br>**7** | 92<br>**4** | | | | | | | | |
| 8 | 51<br>**31** | 103<br>**30** | 215<br>**27** | 335<br>**24** | 440<br>**21** | 550<br>**15** | 560<br>**10** | | | |
| 15 | 52<br>**58** | 105<br>**57** | 220<br>**55** | 340<br>**52** | 455<br>**46** | 570<br>**40** | 640<br>**37** | 745<br>**28** | 850<br>**10** | 960<br>**5** |
| 30 | 55<br>**118** | 110<br>**116** | 232<br>**113** | 352<br>**110** | 470<br>**105** | 600<br>**96** | 685<br>**80** | 790<br>**64** | 900<br>**48** | 1020<br>**35** |
| 45 | 58<br>**180** | 110<br>**177** | 235<br>**174** | 355<br>**170** | 475<br>**164** | 610<br>**155** | 705<br>**140** | 840<br>**126** | 940<br>**106** | 1050<br>**88** |
| 60 | 53<br>**242** | 110<br>**240** | 230<br>**237** | 350<br>**233** | 480<br>**224** | 615<br>**212** | 705<br>**198** | 845<br>**180** | 955<br>**162** | 1080<br>**140** |
| 75 | 45<br>**302** | 105<br>**298** | 230<br>**292** | 355<br>**285** | 485<br>**278** | 620<br>**268** | 710<br>**254** | 850<br>**230** | 960<br>**206** | 1080<br>**182** |
| 90 | 45<br>**364** | 105<br>**360** | 225<br>**352** | 350<br>**342** | 480<br>**338** | 615<br>**322** | 710<br>**305** | 845<br>**288** | 955<br>**265** | |
| 105 | 40<br>**424** | 100<br>**420** | 220<br>**414** | 340<br>**408** | 475<br>**394** | 610<br>**372** | 705<br>**352** | 840<br>**334** | 950<br>**315** | |
| 120 | 38<br>**485** | 95<br>**479** | 210<br>**471** | 340<br>**463** | 470<br>**454** | 590<br>**442** | 700<br>**420** | 830<br>**385** | 940<br>**365** | |
| 135 | 35<br>**546** | 85<br>**540** | 205<br>**532** | 325<br>**525** | 460<br>**516** | 580<br>**504** | 690<br>**478** | 820<br>**445** | | |
| 150 (Max.cont.) | 30<br>**608** | 80<br>**605** | 200<br>**600** | 320<br>**592** | 450<br>**580** | 570<br>**566** | 680<br>**532** | 815<br>**496** | | |
| 170 (Max.int.) | | 65<br>**686** | 190<br>**678** | 315<br>**665** | 440<br>**652** | 560<br>**635** | 675<br>**600** | 750<br>**565** | | |
| 185 | | | 185<br>**750** | 310<br>**746** | 430<br>**730** | 545<br>**708** | 670<br>**658** | | | |
| 205 | | | 175<br>**830** | 300<br>**820** | 418<br>**800** | 536<br>**776** | 562<br>**735** | | | |

## FPMK6 315 [311.6 cm³/rev]

Pressure (MPa)

| Flow (L/min) | 1.75 | 3.5 | 7 | 10.5 | 14 | 17.5 | 20 (Max.cont.) | 24 | 27.5 (Max.int.) | 30 (Peak) |
|---|---|---|---|---|---|---|---|---|---|---|
| 2 | 65<br>**5** | 126<br>**4** | | | | | | | | |
| 8 | 68<br>**24** | 135<br>**23** | 280<br>**22** | 410<br>**20** | 540<br>**16** | 650<br>**13** | 750<br>**9** | 880<br>**3** | | |
| 15 | 70<br>**46** | 135<br>**45** | 285<br>**44** | 435<br>**41** | 565<br>**36** | 690<br>**30** | 810<br>**22** | 940<br>**16** | 1010<br>**9** | 1035<br>**3** |
| 30 | 70<br>**93** | 135<br>**92** | 295<br>**90** | 440<br>**86** | 600<br>**80** | 740<br>**71** | 880<br>**62** | 990<br>**52** | 1100<br>**43** | 1180<br>**31** |
| 45 | 70<br>**142** | 140<br>**140** | 300<br>**138** | 460<br>**132** | 610<br>**127** | 750<br>**120** | 900<br>**118** | 1035<br>**96** | 1165<br>**85** | 1300<br>**72** |
| 60 | 70<br>**190** | 140<br>**189** | 300<br>**186** | 460<br>**182** | 615<br>**176** | 775<br>**167** | 920<br>**154** | 1055<br>**138** | 1200<br>**124** | 1325<br>**105** |
| 75 | 65<br>**238** | 135<br>**237** | 295<br>**235** | 455<br>**231** | 615<br>**225** | 780<br>**214** | 920<br>**200** | 1065<br>**180** | 1215<br>**160** | |
| 90 | 60<br>**285** | 130<br>**284** | 290<br>**280** | 450<br>**276** | 615<br>**270** | 780<br>**260** | 920<br>**245** | 1070<br>**226** | 1220<br>**210** | |
| 105 | 50<br>**335** | 125<br>**333** | 280<br>**330** | 445<br>**324** | 605<br>**316** | 770<br>**302** | 915<br>**290** | 1070<br>**271** | 1205<br>**248** | |
| 120 | 45<br>**384** | 120<br>**382** | 280<br>**380** | 440<br>**372** | 600<br>**364** | 765<br>**350** | 910<br>**338** | 1055<br>**312** | | |
| 135 | 40<br>**432** | 115<br>**428** | 275<br>**420** | 435<br>**412** | 585<br>**408** | 760<br>**391** | 900<br>**380** | 1050<br>**350** | | |
| 150 (Max.cont.) | 35<br>**480** | 110<br>**475** | 270<br>**462** | 420<br>**458** | 570<br>**450** | 755<br>**435** | 880<br>**420** | 1030<br>**395** | | |
| 190 (Max.int.) | | 100<br>**595** | 245<br>**580** | 375<br>**574** | 520<br>**560** | 685<br>**548** | 820<br>**530** | | | |
| 225 | | | 220<br>**690** | 350<br>**683** | 500<br>**674** | 640<br>**652** | 770<br>**634** | | | |

## FPMK6 400 [391.3 cm³/rev]

Pressure (MPa)

| Flow (L/min) | 1.75 | 3.5 | 7 | 10.5 | 14 | 17.5 | 20 (Max.cont.) | 24 | 27.5 (Max.int.) | 30 (Peak) |
|---|---|---|---|---|---|---|---|---|---|---|
| 2 | 90<br>**4** | 172<br>**2** | 360<br>**1** | | | | | | | |
| 8 | 95<br>**19** | 180<br>**18** | 370<br>**17** | 555<br>**16** | 730<br>**14** | 885<br>**12** | 1025<br>**9** | 1195<br>**4** | | |
| 15 | 95<br>**37** | 185<br>**37** | 375<br>**36** | 560<br>**35** | 740<br>**33** | 930<br>**28** | 1070<br>**22** | 1265<br>**14** | 1380<br>**5** | 1625<br>**1** |
| 30 | 98<br>**75** | 185<br>**74** | 380<br>**73** | 575<br>**71** | 760<br>**68** | 960<br>**65** | 1135<br>**55** | 1315<br>**45** | 1455<br>**31** | 1625<br>**20** |
| 45 | 95<br>**114** | 185<br>**113** | 385<br>**111** | 580<br>**108** | 765<br>**105** | 970<br>**100** | 1145<br>**90** | 1335<br>**80** | 1530<br>**72** | |
| 60 | 90<br>**152** | 180<br>**152** | 380<br>**150** | 580<br>**147** | 770<br>**142** | 975<br>**134** | 1155<br>**126** | 1345<br>**112** | | |
| 75 | 85<br>**191** | 180<br>**191** | 380<br>**188** | 580<br>**186** | 775<br>**181** | 980<br>**172** | 1160<br>**160** | 1355<br>**148** | | |
| 90 | 80<br>**230** | 175<br>**229** | 375<br>**227** | 570<br>**224** | 765<br>**220** | 975<br>**212** | 1155<br>**200** | | | |
| 105 | 70<br>**268** | 165<br>**267** | 360<br>**265** | 560<br>**260** | 760<br>**254** | 965<br>**246** | 1150<br>**232** | | | |
| 120 | 65<br>**306** | 160<br>**305** | 355<br>**303** | 550<br>**298** | 745<br>**290** | 950<br>**278** | 1140<br>**262** | | | |
| 135 | 55<br>**345** | 155<br>**343** | 340<br>**337** | 545<br>**330** | 735<br>**322** | 940<br>**310** | 1120<br>**295** | | | |
| 150 (Max.cont.) | 45<br>**382** | 145<br>**380** | 320<br>**376** | 530<br>**370** | 730<br>**362** | 925<br>**352** | | | | |
| 190 (Max.int.) | | 130<br>**483** | 300<br>**476** | 515<br>**470** | 730<br>**458** | 915<br>**445** | | | | |
| 225 | | | 285<br>**570** | 500<br>**560** | 710<br>**550** | 895<br>**535** | | | | |

## FPMK6 500 [490.8 cm³/rev]

Pressure (MPa)

| Flow (L/min) | 1.75 | 3.5 | 7 | 10.5 | 14 | 17.5 | 20 (Max.cont.) | 24 (Max.int.) | 27.5 (Peak) |
|---|---|---|---|---|---|---|---|---|---|
| 4 | 120 **7** | 230 **6** | 470 **5** | 685 **3** | | | | | |
| 8 | 125 **15** | 240 **14** | 475 **13** | 705 **12** | 940 **11** | 1165 **8** | 1375 **3** | | |
| 15 | 125 **30** | 235 **29** | 480 **29** | 720 **28** | 960 **27** | 1190 **25** | 1400 **21** | 1625 **17** | 1880 **12** |
| 30 | 125 **60** | 235 **59** | 485 **58** | 735 **57** | 975 **54** | 1215 **50** | 1445 **45** | 1685 **35** | |
| 45 | 125 **91** | 235 **90** | 485 **89** | 735 **87** | 975 **84** | 1215 **78** | 1450 **70** | | |
| 60 | 120 **121** | 235 **121** | 480 **120** | 730 **118** | 975 **114** | 1220 **108** | 1460 **98** | | |
| 75 | 110 **152** | 225 **151** | 470 **149** | 725 **146** | 970 **142** | 1220 **135** | | | |
| 90 | 100 **182** | 220 **182** | 465 **180** | 720 **178** | 965 **175** | 1215 **168** | | | |
| 105 | 95 **213** | 205 **212** | 460 **210** | 710 **206** | 960 **201** | 1210 **195** | | | |
| 120 | 90 **244** | 195 **243** | 450 **240** | 700 **235** | 950 **228** | 1205 **221** | | | |
| 135 | 85 **274** | 175 **273** | 435 **270** | 680 **265** | 935 **258** | 1170 **250** | | | |
| 150 (Max.cont.) | 70 **304** | 155 **303** | 420 **301** | 665 **292** | 920 **287** | 1150 **280** | | | |
| 190 (Max.int.) | | 130 **385** | 360 **382** | 580 **373** | 865 **365** | | | | |
| 225 | | | 320 **455** | 555 **440** | 800 **432** | | | | |

## FPMK6 630 [623 cm³/rev]

Pressure (MPa)

| Flow (L/min) | 1.75 | 3.5 | 7 | 10.5 | 14 | 17.5 (Max.cont.) | 20 | 22.5 (Max.int.) |
|---|---|---|---|---|---|---|---|---|
| 4 | 130 **6** | 245 **5** | 500 **4** | 750 **2** | | | | |
| 8 | 135 **12** | 265 **12** | 540 **11** | 805 **10** | 1050 **6** | | | |
| 15 | 140 **24** | 280 **23** | 585 **22** | 865 **21** | 1085 **16** | 1425 **13** | | |
| 30 | 145 **48** | 295 **47** | 605 **45** | 925 **42** | 1270 **38** | 1480 **34** | 1780 **30** | 1890 **27** |
| 45 | 145 **72** | 295 **71** | 610 **70** | 920 **68** | 1330 **65** | 1465 **58** | 1770 **50** | |
| 60 | 135 **95** | 285 **94** | 605 **91** | 915 **87** | 1330 **83** | 1465 **78** | | |
| 75 | 130 **120** | 275 **119** | 595 **116** | 915 **112** | 1325 **106** | | | |
| 90 | 115 **145** | 260 **144** | 585 **141** | 905 **137** | 1310 **130** | | | |
| 105 | 100 **168** | 255 **167** | 575 **164** | 895 **160** | 1305 **152** | | | |
| 120 | 85 **192** | 235 **191** | 560 **186** | 880 **182** | 1280 **175** | | | |
| 135 | 75 **216** | 220 **215** | 540 **212** | 855 **207** | | | | |
| 150 (Max.cont.) | 50 **240** | 200 **239** | 525 **236** | 84 **233** | | | | |
| 190 (Max.int.) | | | 465 **300** | 795 **293** | | | | |
| 225 | | | 430 **360** | 740 **348** | | | | |

## FPMK6 800 [802.4 cm³/rev]

Pressure (MPa)

| Flow (L/min) | 1.75 | 3.5 | 5 | 7 | 8.5 | 10.5 | 12 | 14 (Max.cont.) | 15.5 | 17.5 (Max.int.) |
|---|---|---|---|---|---|---|---|---|---|---|
| 4 | 172 **4** | 345 **4** | 530 **2** | 690 **2** | 860 **1** | | | | | |
| 8 | 180 **9** | 355 **9** | 540 **8** | 725 **8** | 955 **7** | 1080 **6** | 1275 **5** | 1360 **4** | | |
| 15 | 185 **18** | 370 **18** | 565 **17** | 758 **17** | 980 **16** | 1130 **15** | 1265 **14** | 1420 **12** | 1655 **10** | 1880 **9** |
| 30 | 190 **36** | 385 **35** | 590 **34** | 795 **33** | 1005 **32** | 1200 **31** | 1330 **29** | 1580 **28** | 1740 **26** | |
| 45 | 190 **55** | 385 **55** | 590 **54** | 800 **53** | 1015 **52** | 1200 **52** | 1380 **50** | 1550 **48** | | |
| 60 | 185 **74** | 380 **73** | 580 **72** | 790 **70** | 1015 **69** | 1200 **67** | 1345 **65** | | | |
| 75 | 176 **92** | 370 **92** | 575 **91** | 782 **88** | 1000 **87** | 1185 **85** | 1365 **82** | | | |
| 90 | 165 **112** | 360 **111** | 560 **110** | 765 **108** | 990 **106** | 1170 **102** | | | | |
| 105 | 150 **130** | 340 **129** | 555 **128** | 750 **127** | 972 **125** | 1155 **120** | | | | |
| 120 | 132 **149** | 325 **148** | 545 **146** | 735 **143** | 945 **140** | 1130 **135** | | | | |
| 135 | 105 **168** | 302 **167** | 525 **165** | 710 **162** | 911 **158** | | | | | |
| 150 (Max.cont.) | 80 **186** | 270 **185** | 500 **183** | 680 **180** | 880 **176** | | | | | |
| 190 (Max.int.) | | 300 **235** | 475 **233** | 660 **230** | 855 **226** | | | | | |
| 225 | | | 423 **280** | 612 **276** | 830 **272** | | | | | |

Torque (N•m) 423
Speed (rpm) **280**

## FPMK6 1000 [981.6 cm³/rev]

Pressure (MPa)

| Flow (L/min) | 1.75 | 3.5 | 5 | 7 | 8.5 | 10.5 | 12 (Max.cont.) | 14 (Max.int.) |
|---|---|---|---|---|---|---|---|---|
| 4 | 225 **3** | 460 **3** | 640 **2** | 875 **2** | 1085 **1** | | | |
| 8 | 230 **7** | 470 **7** | 695 **6** | 945 **6** | 1170 **5** | 1415 **4** | 1560 **3** | 1675 **2** |
| 15 | 240 **15** | 485 **15** | 715 **15** | 965 **14** | 1200 **14** | 1445 **13** | 1580 **13** | 1780 **12** |
| 30 | 240 **30** | 495 **30** | 720 **30** | 995 **29** | 1235 **28** | 1480 **27** | 1640 **25** | 1860 **23** |
| 45 | 240 **45** | 495 **45** | 720 **44** | 1000 **44** | 1250 **43** | 1490 **42** | 1700 **40** | |
| 60 | 235 **60** | 490 **60** | 715 **60** | 990 **59** | 1245 **57** | 1500 **55** | | |
| 75 | 225 **76** | 475 **76** | 710 **76** | 980 **75** | 1230 **73** | 1485 **70** | | |
| 90 | 215 **91** | 460 **91** | 705 **91** | 960 **90** | 1215 **88** | 1465 **85** | | |
| 105 | 200 **106** | 445 **106** | 690 **105** | 940 **105** | 1195 **103** | 1440 **100** | | |
| 120 | 185 **122** | 420 **122** | 665 **121** | 920 **119** | 1155 **116** | | | |
| 135 | 150 **137** | 390 **137** | 635 **136** | 890 **136** | 1120 **134** | | | |
| 150 (Max.cont.) | 110 **152** | 360 **151** | 605 **150** | 860 **148** | 1080 **145** | | | |
| 190 (Max.int.) | | 320 **192** | 575 **190** | 820 **188** | 1045 **185** | | | |
| 225 | | | 515 **230** | 800 **228** | 1020 **224** | | | |

cont.
int.

# FPMK6 - DIMENSIONS MOUNTING DATA

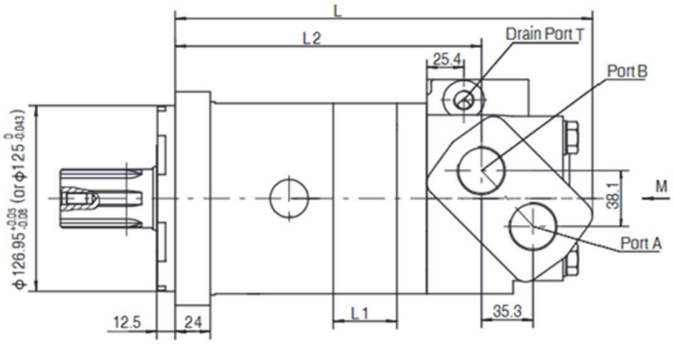


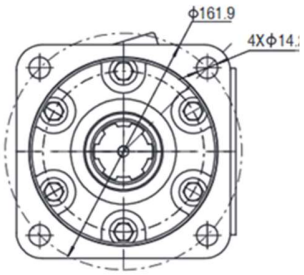


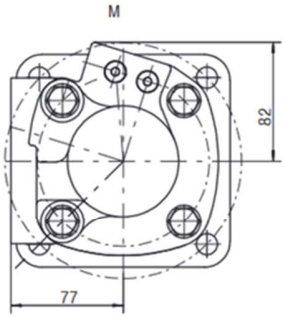


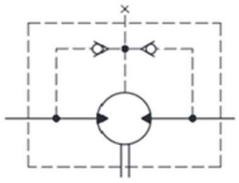

| Model | L | L1 | L2 |
|---|---|---|---|
| FPMK6-200 | 265 | 21.7 | 187.5 |
| FPMK6-250 | 271 | 27.3 | 193.1 |
| FPMK6-315 | 278 | 34.5 | 200.3 |
| FPMK6-400 | 287 | 43.4 | 209.2 |
| FPMK6-500 | 298 | 54.4 | 220.2 |
| FPMK6-630 | 313 | 69.1 | 234.9 |
| FPMK6-800 | 333 | 89 | 254.8 |
| FPMK6-1000 | 353 | 108.9 | 274.7 |

Direction of shaft rotation:Standard
When facing shaft end of motor,shaft to rotate:
Clockwise when port "A" is pressurized.
Counter-clockwise when port "B" is pressurized.

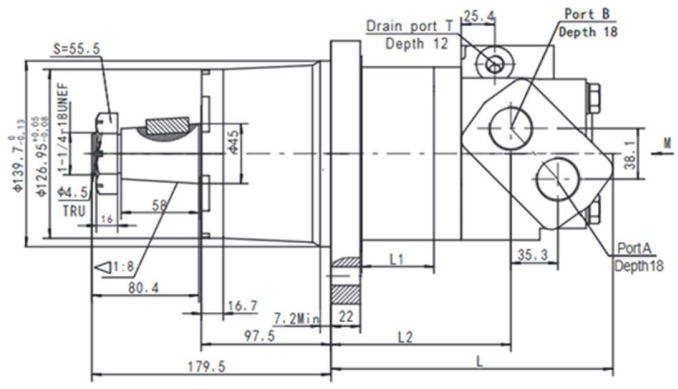


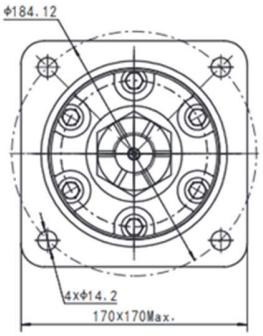


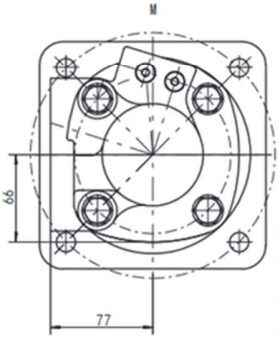


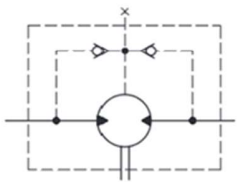

| Model | L | L1 | L2 |
|---|---|---|---|
| FPMK6-200 | 179 | 21.7 | 102.5 |
| FPMK6-250 | 185 | 27.3 | 108 |
| FPMK6-315 | 192 | 34.5 | 115.5 |
| FPMK6-400 | 201 | 43.4 | 124.5 |
| FPMK6-500 | 212 | 54.4 | 135.5 |
| FPMK6-630 | 226.7 | 69.1 | 150.2 |
| FPMK6-800 | 246.5 | 89 | 170 |
| FPMK6-1000 | 266.5 | 108.9 | 190 |

Direction of shaft rotation:Standard
When facing shaft end of motor,shaft to rotate:
Clockwise when port "A" is pressurized.
Counter-clockwise when port "B" is pressurized.

## FPMK6 - for CC And W Mounting Radial forces

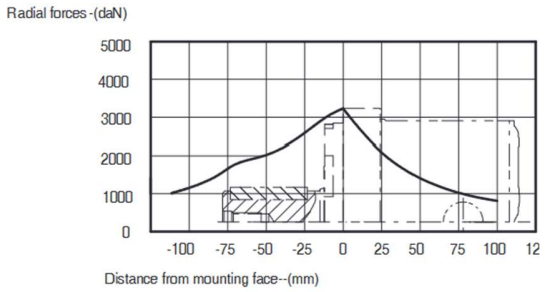


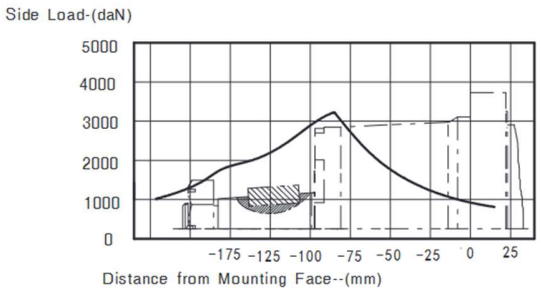


The bearing curve represents allowable bearing loads for an $B_{10}$ bearing life (2000 hours or $12x10^6$ revolutions at 100rpm) at rated output torque. Other speed load multiply a load values. The maximum load curve is defined by bearing static load capacity. This curve should not be exceeded at any time including shock loads.

## FPMK6 - Shaft Extensions For Dimensions Data

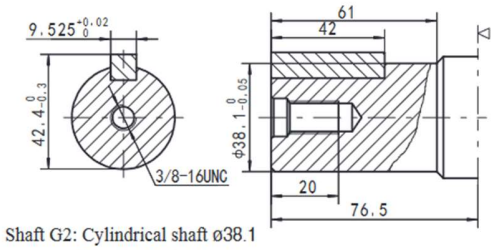


Shaft G2: Cylindrical shaft ø38.1
Parallel key 9.525x9.525x42
Max.Torque: 1350Nm

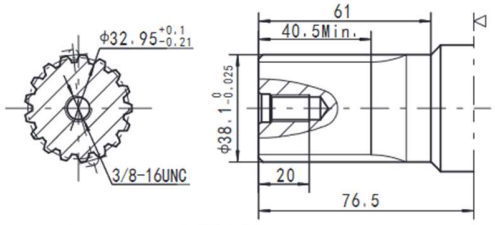


Shaft FE: Splined 17-DP12/24
Max.Torque: 1350Nm

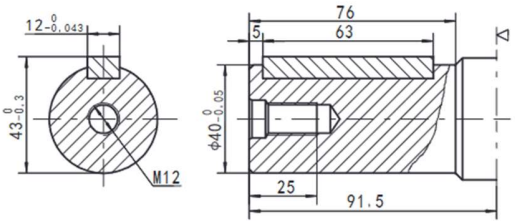


Shaft Y1: Cylindrical shaft ø40
Parallel key 12x8x63
Max.Torque: 1400Nm

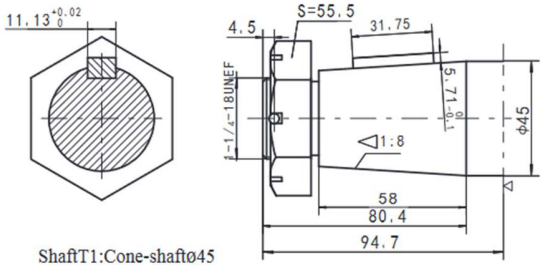


ShaftT1:Cone-shaftø45
Parallelkey11.13x11.13x31.75
Tighteningtorque: 500±10Nm
Max. torque 2100Nm

◁ Motor Mounting Surface CC Flange

# *DIMENSIONS of PORTS FOR FPMK6*

Port：SF5、SF6、SF7、SF8

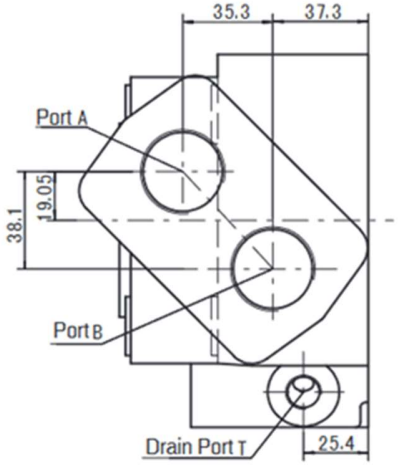


Port：SF

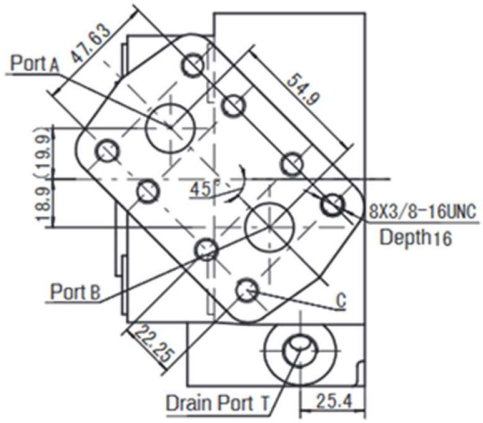


Port：SF0

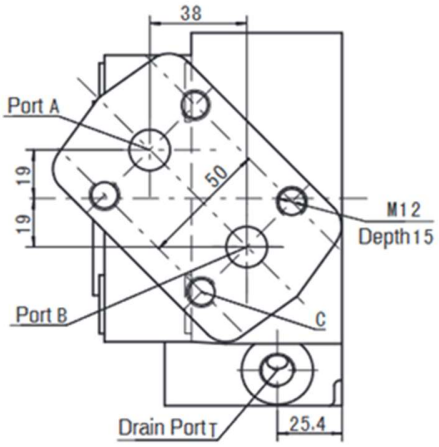

| Mounting \ Code | Type | | | | | |
|---|---|---|---|---|---|---|
| | SF5 (depth) | SF6 (depth) | SF7 (depth) | SF8 (depth) | SF (depth) | SF0 (depth) |
| P(A,B) | 1-5/16-12UN(18) | M33X2(18) | G1(18) | G3/4(18) | Φ19.05 | Φ16 |
| T | 7/16-20UNF(12) | M14X1.5(12) | G1/4(12) | G1/4(12) | 7/16-20UNF(12) | M14X1.5(12) |
| C | - | - | - | - | 8X3/8-16UNC | 4XM12 |

## Order *Information*

FPMK6 | 1 | 2 | 3 | 4 | 5 | 6 | 7 | 8

| Pos.1 | 2 | 3 | | | 4 | | | 5 | | | 6 | | 7 | | | 8 | |
|---|---|---|---|---|---|---|---|---|---|---|---|---|---|---|---|---|---|
| Code | Disp. | Flange | | | Output Shaft | | | Port and Drain Port | | | Rotation Direction | | Paint | | | Unusually Function | |
| Omit | 200 | CC | 4-Φ14.2Square-flange Φ161.9, pilot Φ127×12.5 | | G2 | Shaft Φ38.1, parallel key9.52×9.52×57.15 | | SF | 3/4"Manifold Mount8×3/8-16UNC, 7/16-20UNF Φ16Manifold Mount4×M12, M14×1.5 | | Omit | Standard | 00 | Omit | No paint | Omit | Standard |
| | 250 | | | | FE | Shaft Φ38.1, splined tooth17-DP12/24 | | SF0 | | | R | Opposite | B | | Blue | | |
| | 315 | | | | Y1 | Shaft Φ40, parallel key12×8×63 | | SF5 | 1-5/16-12UN, 7/16-20UNF | | | | S | | Black | | |
| | 400 | CC1 | 4-Φ14.2Square-flange Φ161.9, pilot Φ125×12.5 | | T1 | Cone-shaft 1:8 Φ45, parallel key 11.13X11.13X31.75 | | SF6 | M33×2, M14×1.5 | | | | | | Silver grey | | |
| | 500 | | | | | | | SF7 | G1, G1/4 | | | | | | | | |
| | 630 | W | 4-Φ14.2 Wheel-flange Φ184.12, Piliot 139.7 | | | | | SF8 | G3/4, G1/4 | | | | | | | | |
| | 800 | | | | | | | | | | | | | | | | |
| | 1000 | | | | | | | | | | | | | | | | |

Note: When the table is used, please fill the code of left rows in dash area and give us, which the code information is consists of construction, displacement, mounting flange, output shaft and ports. If the specification is not in the table or you have specific requirements, please contact us.

# FPME2 SERIES HYDRAULIC MOTOR

FPME2 series motor adapt the advanced Geroler gear set designed with high speed distribution flow and high pressure, and have good stability in low speed, and can keep high volume efficiency. The unit can be supplied the individual variant in operating multifunction in accordance with requirement of applications.

*Characteristic features:*

- Advanced manufacturing devices for the Geroler gear set, which use low pressure of start-up, provide smooth and reliable operation and high efficiency.
- The output shaft adapts in needle roller bearings that permit high axial and radial forces. The case can offers capacities of high pressure and high torque in the wide of applications.
- Advanced design in high speed distribution flow, which can automatically compensate in operating with high volume efficiency and long life, provide smooth and reliable operation.
- Lowest leakage rate, most accurate timing methods. Commutator rotates 6x faster than shaft speed. It make the distribution in a high precision reduces life-cycle cost, maintain high volume efficiencies and can run very smoothly at low speed, gear box not required.

## *Main Specification*

| *Type* | | *FPM E2 65* | *FPM E2 80* | *FPM E2 100* | *FPM E2 125* | *FPM E2 160* | *FPM E2 200* | *FPM E2 230* | *FPM E2 250* | *FPM E2 295* | *FPM E2 315* | *FPM E2 375* |
|---|---|---|---|---|---|---|---|---|---|---|---|---|
| Displacement (cm³/rev) | | 66.8 | 81.3 | 101.6 | 127 | 157.2 | 193.6 | 226 | 257 | 287.8 | 314.5 | 370 |
| Max. speed (rpm) | cont. | 667 | 543 | 439 | 350 | 283 | 229 | 247 | 216 | 196 | 178 | 152 |
| | int. | 842 | 689 | 553 | 441 | 355 | 289 | 328 | 287 | 254 | 235 | 199 |
| Max. torque (Nm) | cont. | 126 | 157 | 191 | 245 | 307 | 382 | 378 | 381 | 393 | 448 | 439 |
| | int. | 176 | 215 | 268 | 335 | 422 | 520 | 528 | 543 | 547 | 587 | 613 |
| Max. output (kW) | cont. | 8.3 | 8.8 | 7.9 | 8.9 | 8.9 | 9 | 9.9 | 9.3 | 8.7 | 8 | 7.6 |
| | int. | 13.9 | 14.4 | 13.5 | 14.1 | 15.6 | 15.7 | 17.9 | 16.5 | 15.6 | 14.3 | 14 |
| Max. pressure drop (MPa) | cont. | 14 | 14 | 14 | 14 | 14 | 14 | 12 | 11 | 10 | 10 | 9 |
| | int. | 19 | 19 | 19 | 19 | 19 | 19 | 165 | 15.5 | 14.5 | 13.5 | 12.5 |
| | peak | 20 | 20 | 20 | 20 | 20 | 20 | 18 | 18 | 17 | 16 | 16 |
| Max. flow (L/min) | cont. | 45 | 45 | 45 | 45 | 45 | 45 | 57 | 57 | 57 | 57 | 57 |
| | int. | 57 | 57 | 57 | 57 | 57 | 57 | 75 | 75 | 75 | 75 | 75 |

- Continuous pressure: Max. value of operating motor continuously.

- Intermittent pressure: Max. value of operating motor in 6 seconds per minute.
- Peak pressure: Max. value of operating motor in 0.6 second per minute.

## *Performance Data*

FPME2 65 [66.8 cm³/rev]

| Flow (L/min) | Pressure (MPa) 3.5 | 7 | 10.5 | 14 (Max.cont.) | 19 (Max.int.) |
|---|---|---|---|---|---|
| 2 | 26 / **22** | 54 / **16** | 83 / **4** | | |
| 5 | 27 / **69** | 56 / **62** | 87 / **53** | 118 / **42** | |
| 10 | 29 / **145** | 60 / **141** | 91 / **132** | 123 / **122** | 171 / **95** |
| 15 | 30 / **221** | 62 / **216** | 94 / **207** | 126 / **196** | 176 / **149** |
| 20 | 28 / **295** | 58 / **290** | 91 / **279** | 122 / **261** | 174 / **232** |
| 25 | 24 / **368** | 55 / **365** | 90 / **352** | 121 / **341** | 172 / **312** |
| 34 | 22 / **501** | 54 / **493** | 89 / **478** | 119 / **457** | 171 / **423** |
| 45 (Max.cont.) | 20 / **667** | 52 / **660** | 85 / **642** | 115 / **621** | 168 / **587** |
| 57 (Max.int.) | 15 / **842** | 46 / **835** | 80 / **814** | 112 / **789** | 163 / **735** |

FPME2 80 [81.3 cm³/rev]

| Flow (L/min) | Pressure (MPa) 3.5 | 7 | 10.5 | 14 (Max.cont.) | 19 (Max.int.) |
|---|---|---|---|---|---|
| 2 | 33 / **18** | 70 / **14** | 106 / **4** | | |
| 5 | 35 / **55** | 72 / **51** | 111 / **44** | 150 / **25** | |
| 10 | 36 / **121** | 75 / **118** | 114 / **113** | 155 / **107** | 215 / **88** |
| 15 | 37 / **181** | 77 / **178** | 116 / **171** | 157 / **162** | 215 / **148** |
| 20 | 35 / **242** | 74 / **238** | 112 / **231** | 151 / **223** | 206 / **205** |
| 25 | 35 / **303** | 71 / **298** | 108 / **289** | 148 / **275** | 202 / **261** |
| 34 | 31 / **411** | 69 / **407** | 105 / **396** | 145 / **382** | 198 / **373** |
| 45 (Max.cont.) | 23 / **543** | 62 / **537** | 100 / **521** | 139 / **513** | 12 / **501** |
| 57 (Max.int.) | 18 / **689** | 55 / **681** | 98 / **665** | 134 / **649** | 186 / **618** |

## FPME2 100 [101.6 cm³/rev]

Pressure (MPa)

| Flow (L/min) | 3.5 | 7 | 10.5 | 14 (Max.cont.) | 19 (Max.int.) |
|---|---|---|---|---|---|
| 2 | 40<br>**15** | 82<br>**11** | 126<br>**4** | | |
| 5 | 41<br>**44** | 83<br>**36** | 150<br>**28** | 206<br>**12** | |
| 10 | 42<br>**97** | 91<br>**95** | 138<br>**94** | 177<br>**81** | 230<br>**54** |
| 15 | 42<br>**147** | 91<br>**144** | 138<br>**137** | 185<br>**124** | 257<br>**93** |
| 20 | 38<br>**195** | 88<br>**192** | 136<br>**182** | 180<br>**169** | 244<br>**138** |
| 25 | 39<br>**244** | 89<br>**241** | 142<br>**230** | 191<br>**221** | 268<br>**194** |
| 34 | 31<br>**331** | 79<br>**328** | 131<br>**323** | 179<br>**308** | 250<br>**273** |
| Max.cont. 45 | 21<br>**439** | 70<br>**436** | 119<br>**433** | 168<br>**419** | 241<br>**383** |
| Max.int. 57 | 10<br>**553** | 60<br>**545** | 109<br>**534** | 158<br>**527** | 232<br>**491** |

Torque (N•m) 158
Speed (rpm) **527**

## FPME2 125 [127 cm³/rev]

Pressure (MPa)

| Flow (L/min) | 3.5 | 7 | 10.5 | 14 (Max.cont.) | 19 (Max.int.) |
|---|---|---|---|---|---|
| 2 | 52<br>**12** | 150<br>**9** | 158<br>**3** | | |
| 5 | 55<br>**35** | 112<br>**31** | 170<br>**22** | 221<br>**15** | 290<br>**10** |
| 10 | 57<br>**78** | 117<br>**75** | 180<br>**69** | 242<br>**63** | 335<br>**46** |
| 15 | 56<br>**116** | 118<br>**113** | 180<br>**109** | 245<br>**99** | 331<br>**76** |
| 20 | 55<br>**155** | 117<br>**153** | 178<br>**147** | 242<br>**136** | 331<br>**110** |
| 25 | 52<br>**593** | 111<br>**188** | 177<br>**182** | 238<br>**172** | 325<br>**151** |
| 34 | 43<br>**264** | 105<br>**262** | 169<br>**254** | 231<br>**244** | 326<br>**220** |
| Max.cont. 45 | 38<br>**350** | 95<br>**348** | 159<br>**346** | 219<br>**331** | 314<br>**301** |
| Max.int. 57 | 21<br>**441** | 176<br>**439** | 141<br>**431** | 280<br>**417** | 302<br>**384** |

cont.
int.

## FPME2 160 [157.2 cm³/rev]

Pressure (MPa)

| Flow (L/min) | 3.5 | 7 | 10.5 | 14 (Max.cont.) | 19 (Max.int.) |
|---|---|---|---|---|---|
| 2 | 64<br>**10** | 132<br>**8** | 199<br>**2** | | |
| 5 | 68<br>**28** | 138<br>**26** | 208<br>**19** | 281<br>**10** | |
| 10 | 71<br>**62** | 147<br>**60** | 221<br>**56** | 303<br>**53** | 419<br>**38** |
| 15 | 72<br>**93** | 148<br>**91** | 225<br>**87** | 307<br>**79** | 426<br>**61** |
| 20 | 71<br>**126** | 148<br>**123** | 223<br>**118** | 305<br>**110** | 422<br>**95** |
| 25 | 62<br>**157** | 140<br>**155** | 218<br>**152** | 296<br>**141** | 415<br>**129** |
| 34 | 56<br>**214** | 134<br>**211** | 211<br>**206** | 287<br>**197** | 408<br>**181** |
| Max.cont. 45 | 47<br>**283** | 127<br>**281** | 205<br>**275** | 281<br>**266** | 391<br>**241** |
| Max.int. 57 | 36<br>**355** | 97<br>**352** | 182<br>**346** | 260<br>**336** | 370<br>**311** |

## FPME2 200 [193.6 cm³/rev]

Pressure (MPa)

| Flow (L/min) | 3.5 | 7 | 10.5 | 14 (Max.cont.) | 19 (Max.int.) |
|---|---|---|---|---|---|
| 2 | 80<br>**9** | 163<br>**7** | 245<br>**3** | | |
| 5 | 88<br>**23** | 178<br>**21** | 266<br>**18** | 352<br>**12** | |
| 10 | 89<br>**49** | 181<br>**48** | 275<br>**43** | 378<br>**39** | 517<br>**27** |
| 15 | 91<br>**76** | 188<br>**73** | 280<br>**68** | 382<br>**63** | 520<br>**44** |
| 20 | 89<br>**101** | 182<br>**98** | 275<br>**95** | 374<br>**86** | 517<br>**69** |
| 25 | 78<br>**127** | 170<br>**125** | 271<br>**121** | 376<br>**113** | 518<br>**101** |
| 34 | 64<br>**173** | 158<br>**171** | 268<br>**165** | 363<br>**156** | 502<br>**143** |
| Max.cont. 45 | 51<br>**229** | 157<br>**227** | 252<br>**221** | 351<br>**212** | 494<br>**196** |
| Max.int. 57 | 36<br>**289** | 138<br>**286** | 231<br>**279** | 330<br>**271** | 469<br>**256** |

## FPME2 230 [226 cm³/rev]

Pressure (MPa)

| Flow (L/min) | 3.5 | 7 | 10.5 | 12 (Max.cont.) | 16.5 (Max.int.) |
|---|---|---|---|---|---|
| 2 | 97<br>**7** | 191<br>**4** | 280<br>**2** | | |
| 5 | 101<br>**18** | 199<br>**14** | 301<br>**8** | 348<br>**4** | |
| 10 | 103<br>**43** | 214<br>**42** | 325<br>**40** | 378<br>**36** | 527<br>**29** |
| 15 | 104<br>**65** | 215<br>**63** | 327<br>**59** | 375<br>**52** | 528<br>**47** |
| 20 | 101<br>**86** | 210<br>**84** | 321<br>**81** | 371<br>**75** | 524<br>**66** |
| 25 | 95<br>**108** | 201<br>**106** | 316<br>**102** | 364<br>**94** | 511<br>**87** |
| 34 | 82<br>**147** | 188<br>**145** | 308<br>**141** | 358<br>**135** | 501<br>**128** |
| 45 | 55<br>**197** | 158<br>**195** | 276<br>**191** | 329<br>**186** | 485<br>**176** |
| Max.cont. 57 | 19<br>**247** | 130<br>**244** | 256<br>**240** | 301<br>**230** | 451<br>**221** |
| Max.int. 75 | | 65<br>**328** | 183<br>**323** | 250<br>**311** | 401<br>**303** |

Torque (N•m) 250
Speed (rpm) **311**

## FPME2 250 [257 cm³/rev]

Pressure (MPa)

| Flow (L/min) | 3.5 | 7 | 10.5 | 11 (Max.cont.) | 15.5 (Max.int.) |
|---|---|---|---|---|---|
| 2 | 112<br>**6** | 207<br>**3** | 309<br>**1** | | |
| 5 | 115<br>**18** | 218<br>**14** | 320<br>**8** | 348<br>**4** | |
| 10 | 113<br>**39** | 235<br>**38** | 358<br>**35** | 379<br>**31** | 543<br>**23** |
| 15 | 113<br>**58** | 234<br>**56** | 357<br>**53** | 381<br>**45** | 542<br>**3** |
| 20 | 111<br>**77** | 233<br>**75** | 356<br>**72** | 376<br>**65** | 541<br>**48** |
| 25 | 109<br>**97** | 228<br>**95** | 354<br>**89** | 371<br>**81** | 532<br>**69** |
| 34 | 91<br>**131** | 213<br>**128** | 346<br>**123** | 364<br>**116** | 521<br>**103** |
| 45 | 89<br>**174** | 211<br>**172** | 345<br>**165** | 361<br>**157** | 518<br>**135** |
| Max.cont. 57 | 73<br>**216** | 208<br>**213** | 339<br>**205** | 342<br>**197** | 487<br>**184** |
| Max.int. 75 | | 74<br>**287** | 198<br>**284** | 301<br>**278** | 441<br>**267** |

cont.
int.

## FPME2 295 [287.8 cm³/rev]

Pressure (MPa)

| Flow (L/min) | 3.5 | 7 | 11 | 14.5 (Max.int.) |
|---|---|---|---|---|
| 5 | 121<br>**15** | 243<br>**14** | 368<br>**10** | 509<br>**5** |
| 10 | 125<br>**33** | 253<br>**31** | 381<br>**27** | 529<br>**20** |
| 15 | 129<br>**51** | 261<br>**50** | 393<br>**47** | 547<br>**41** |
| 20 | 127<br>**68** | 259<br>**67** | 390<br>**63** | 545<br>**55** |
| 25 | 126<br>**86** | 255<br>**84** | 386<br>**80** | 539<br>**69** |
| 34 | 123<br>**116** | 248<br>**114** | 380<br>**110** | 531<br>**98** |
| 45 | 115<br>**154** | 234<br>**153** | 368<br>**148** | 522<br>**136** |
| Max.cont. 57 | 108<br>**196** | 227<br>**194** | 359<br>**187** | 514<br>**176** |
| Max.int. 75 | | 211<br>**254** | 349<br>**246** | 506<br>**231** |

Torque (N•m) 506
Speed (rpm) **231**

## FPME2 315 [314.5 cm³/rev]

Pressure (MPa)

| Flow (L/min) | 3.5 | 7 | 11 | 13.5 (Max.int.) |
|---|---|---|---|---|
| 5 | 136<br>**11** | 281<br>**8** | 427<br>**3** | |
| 10 | 139<br>**30** | 287<br>**29** | 438<br>**26** | 574<br>**20** |
| 15 | 141<br>**47** | 295<br>**46** | 448<br>**43** | 587<br>**40** |
| 20 | 138<br>**62** | 287<br>**61** | 442<br>**58** | 587<br>**53** |
| 25 | 131<br>**78** | 280<br>**75** | 431<br>**71** | 567<br>**66** |
| 34 | 117<br>**106** | 269<br>**104** | 423<br>**98** | 557<br>**91** |
| 45 | 114<br>**141** | 253<br>**138** | 397<br>**132** | 535<br>**125** |
| Max.cont. 57 | 86<br>**178** | 219<br>**173** | 383<br>**168** | 505<br>**162** |
| Max.int. 75 | | 108<br>**235** | 287<br>**231** | 416<br>**219** |

# FPME2 295 [287.8 cm³/rev]

Pressure (MPa)

| Flow (L/min) | 3.5 | 7 | 9 | Max.int. 12.5 |
|---|---|---|---|---|
| 5 | 151<br>**10** | 315<br>**7** | 412<br>**3** | |
| 10 | 155<br>**25** | 324<br>**24** | 427<br>**21** | 606<br>**18** |
| 15 | 162<br>**40** | 331<br>**39** | 439<br>**37** | 613<br>**32** |
| 20 | 158<br>**53** | 326<br>**52** | 434<br>**49** | 602<br>**45** |
| 25 | 151<br>**67** | 316<br>**65** | 424<br>**62** | 589<br>**58** |
| 34 | 141<br>**91** | 309<br>**89** | 417<br>**85** | 580<br>**80** |
| 45 | 138<br>**121** | 300<br>**119** | 408<br>**115** | 572<br>**107** |
| Max.cont. 57 | 118<br>**152** | 281<br>**150** | 393<br>**144** | 550<br>**136** |
| Max.int. 75 | | 258<br>**199** | 369<br>**191** | 518<br>**183** |

cont.
int.

# FPME2 DIMENSIONS AND MOUNTING DATA

Wheel Mount
Code: Port A、B
WS 7/8—14 O—ring
WD G1/2
WM M22x1.5

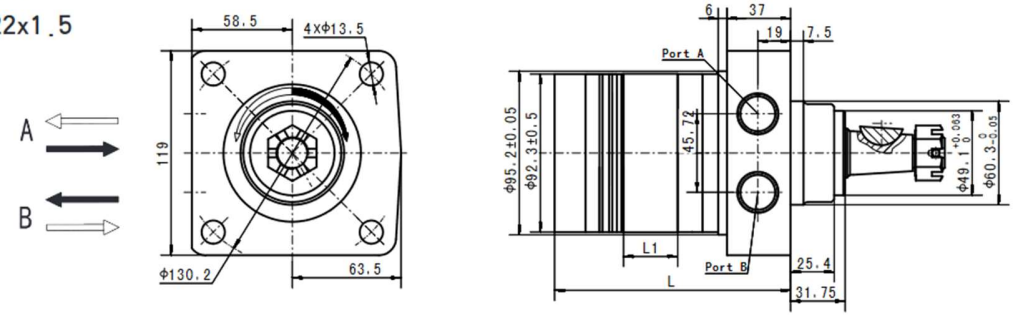


| Displacement (cm³/rev) | 65 | 80 | 100 | 125 | 160 | 200 | 230 | 250 | 295 | 315 | 375 |
|---|---|---|---|---|---|---|---|---|---|---|---|
| L1 (mm) | 13 | 16 | 20 | 25 | 30.5 | 38.1 | 44 | 50 | 56 | 62 | 74 |
| L (mm) | 119 | 122 | 126 | 131 | 136.5 | 144 | 150 | 156 | 162 | 168 | 180 |
| Weight (kg) | 7.4 | 7.5 | 7.8 | 8 | 8.3 | 8.7 | 9.2 | 9.6 | 10 | 10.3 | 10.8 |

Code:HM Manifold
A, B Port Ø12.7

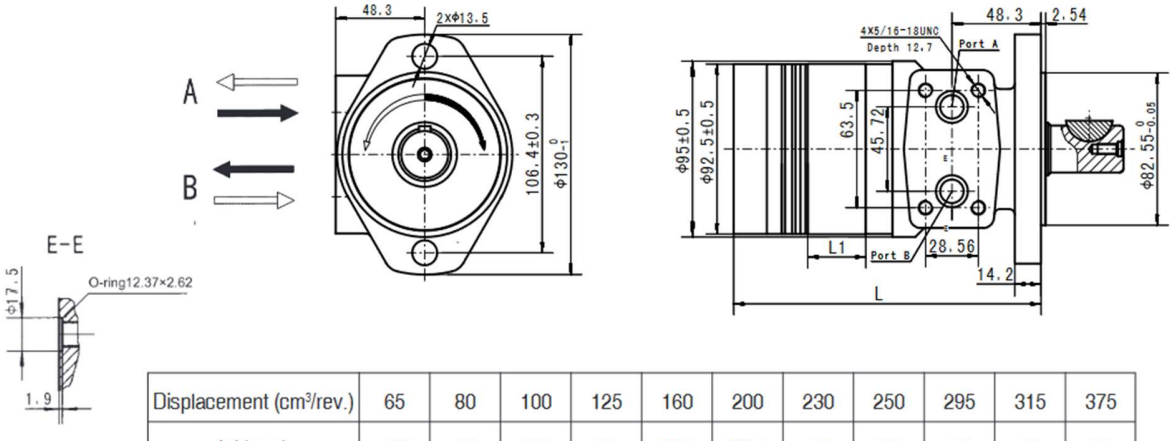


| Displacement (cm³/rev.) | 65 | 80 | 100 | 125 | 160 | 200 | 230 | 250 | 295 | 315 | 375 |
|---|---|---|---|---|---|---|---|---|---|---|---|
| L1(mm) | 13 | 16 | 20 | 25 | 30.5 | 38.1 | 44 | 50 | 56 | 62 | 74 |
| L(mm) | 149 | 152 | 156 | 161 | 166.5 | 174 | 180 | 186 | 192 | 198 | 210 |
| Weight(kg) | 6.4 | 6.5 | 6.8 | 7 | 7.3 | 7.7 | 8.2 | 8.6 | 9 | 9.3 | 9.8 |

Code: Port A, B
HS 7/8-14UNF
HP 1/2-14NPTF
HD G1/2
HG M22x1.5

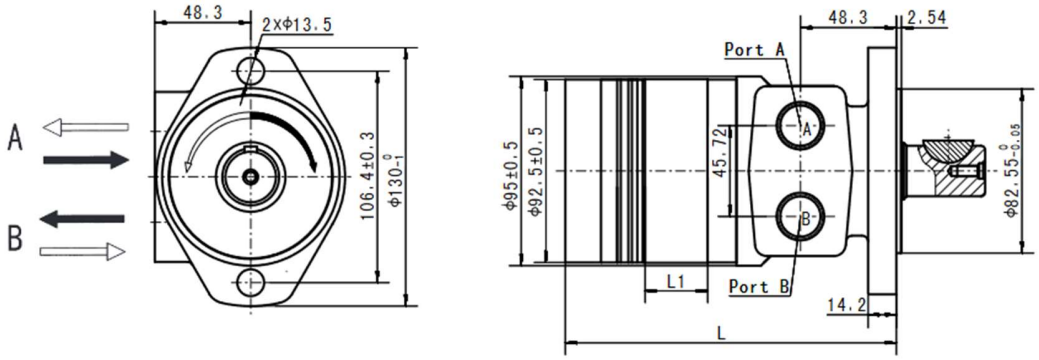


| Displacement (cm³/rev.) | 65 | 80 | 100 | 125 | 160 | 200 | 230 | 250 | 295 | 315 | 375 |
|---|---|---|---|---|---|---|---|---|---|---|---|
| L1(mm) | 13 | 16 | 20 | 25 | 30.5 | 38.1 | 44 | 50 | 56 | 62 | 74 |
| L(mm) | 149 | 152 | 156 | 161 | 166.5 | 174 | 180 | 186 | 192 | 198 | 210 |
| Weight(kg) | 6.4 | 6.5 | 6.8 | 7 | 7.3 | 7.7 | 8.2 | 8.6 | 9 | 9.3 | 9.8 |

Code: Port A, B
H4S 7/8-14UNF
H4P 1/2-14NPTF
H4D G1/2
H4G M22x1.5

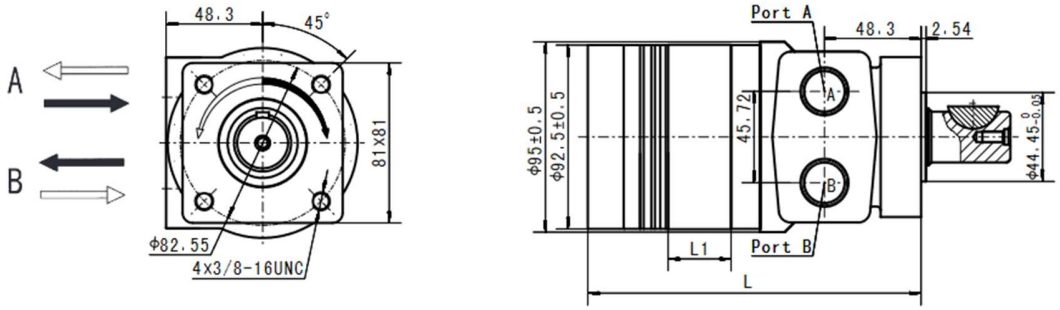


| Displacement (cm³/rev.) | 65 | 80 | 100 | 125 | 160 | 200 | 230 | 250 | 295 | 315 | 375 |
|---|---|---|---|---|---|---|---|---|---|---|---|
| L1(mm) | 13 | 16 | 20 | 25 | 30.5 | 38.1 | 44 | 50 | 56 | 62 | 74 |
| L(mm) | 149 | 152 | 156 | 161 | 166.5 | 174 | 180 | 186 | 192 | 198 | 210 |
| Weight(kg) | 6.4 | 6.5 | 6.8 | 7 | 7.3 | 7.7 | 8.2 | 8.6 | 9 | 9.3 | 9.8 |

# FPME2 - SHAFT EXTENSIONS DIMENSIONS DATA

Shaft T

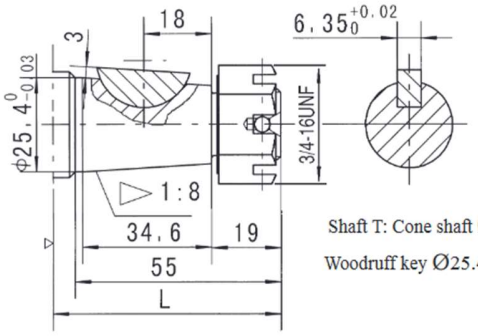


Shaft T: Cone shaft Ø25.4
Woodruff key Ø25.4x6.35

Shaft A

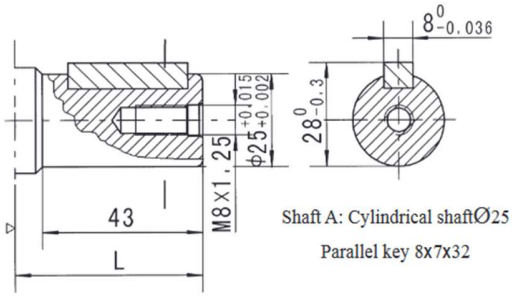


Shaft A: Cylindrical shaftØ25
Parallel key 8x7x32

Shaft K

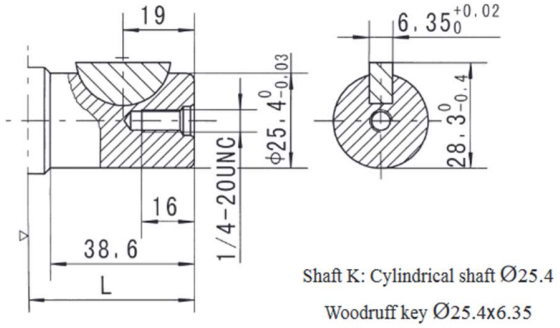


Shaft K: Cylindrical shaft Ø25.4
Woodruff key Ø25.4x6.35

Shaft S

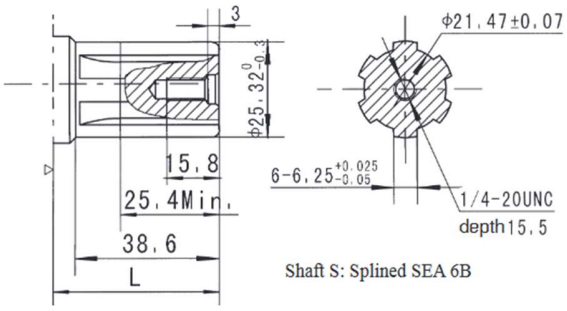


Shaft S: Splined SEA 6B

Shaft H

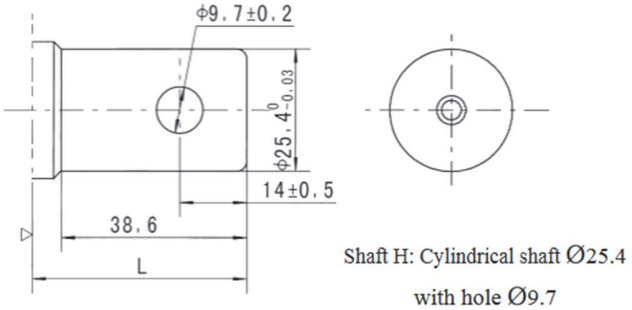


Shaft H: Cylindrical shaft Ø25.4
with hole Ø9.7

## Dimension L

| Shaft / Mounting | T | A | K | S | H |
|---|---|---|---|---|---|
| WS | 90.2 | 78.2 | 73.9 | 73.9 | 73.9 |
| HS/HP | 61 | 49 | 44.7 | 44.7 | 44.7 |
| H4S/H4P | | | | | |
| HM | | | | | |

▷ Motor Mounting Surface

## *Permissble Shaft Loads*

*FPME2 for Wheel Mouning*

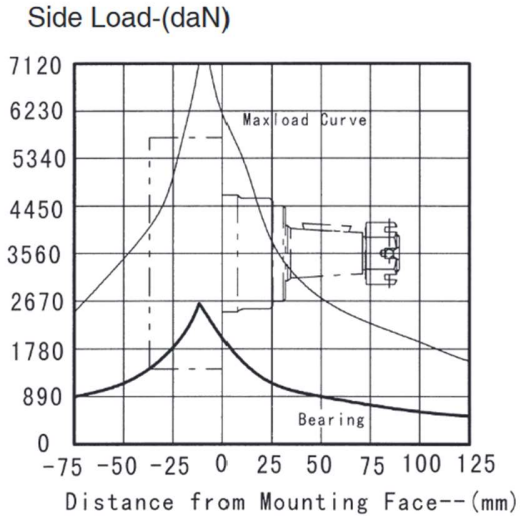


*FPME2 for other Mounting*

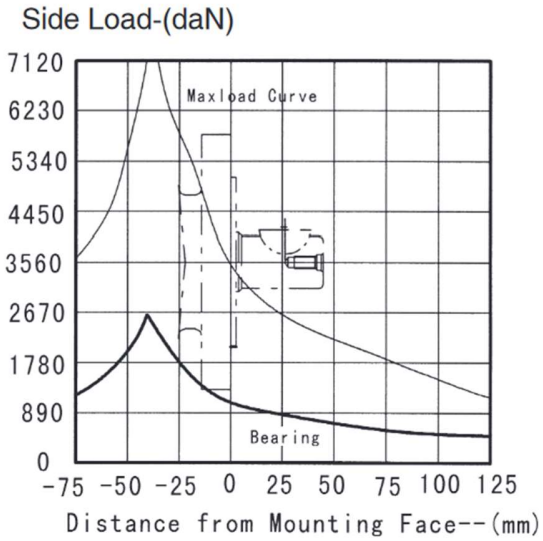


The bearing curve represents al lowable bearing loads for an $L_{10}$ bearing life at $3x10^6$ revolutions, The maximum load curve is defined by bearing static load capacity. This curve should not be exceeded at any time including shock loads.

# Order Information

| | 1 | 2 | 3 | 4 | 5 | 6 | 7 |
|---|---|---|---|---|---|---|---|
| FPME2 | | - | - | - | - | - | - |

| Pos.1 | 2 | 3 | | 4 | | 5 | | 6 | | 7 |
|---|---|---|---|---|---|---|---|---|---|---|
| Code | Disp. | Flange,Pilot,Ports | | Output Shaft | | Rotation Direction | | Paint | | Unusually Function |
| Omit | 65 | WS | 4-Ø13.5 Wheel - flange,Pilot Ø60.3×7 Port 7/8-14 O-ring | T | Cone-Shaft Ø25.4,Woodruff key Ø25.4×6.35 | Omit | Standard | 00 | No paint | Omit Standard |
| | 80 | WD | 4-Ø13.5 Wheel -flange,Pilot Ø60.3×7 Port G1/2 | A | Cylindrical Shaft Ø25, Parallel key 8×7×32 | | | Omit | Blue | |
| | 100 | WM | 4-Ø13.5 Wheel -flange,Pilot Ø60.3×7 Port M22*1.5 | K | Cylindrical Shaft Ø25.4, Woodruff key Ø25.4×6.35 | R | Opposite | B | Black | |
| | 125 | HM | 2-Ø13.5 Rhomb-flange,Pilot Ø82.5×2.54 Port 1/2" Manifold mount 4×5/8-18 | S | Shaft Ø25.4, Splined key SAE 6B | | | S | Silver grey | |
| | 160 | HS | 2-Ø13.5 Rhomb-flange,Pilot Ø82.5×2.54 Port 7/8-14 O-ring | H | Cylindrical Shaft Ø25.4,Pin Hole Ø9.7 | | | | | |
| | 200 | HP | 2-Ø13.5 Rhomb-flange,Pilot Ø82.5×2.54 Port 1/2-14 NPFT Pipe | | | | | | | |
| | 230 | HD | 2-Ø13.5 Rhomb-flange,Pilot Ø82.5×2.54 Port G1/2 | | | | | | | |
| | 250 | HG | 2-Ø13.5 Rhomb-flange,Pilot Ø82.5×2.54 Port M22x1.5 | | | | | | | |
| | 295 | H4S | 4-3/8-16 Square- flange,Pilot Ø44.4×2.54 Port 7/8-14 O-ring | | | | | | | |
| | 315 | H4P | 4-3/8-16 Square- flange,Pilot Ø44.4×2.54 Port 1/2-14 NPFT Pipe | | | | | | | |
| | 375 | H4D | 4-3/8-16 Square- flange,Pilot Ø44.4×2.54 Port G1/2 | | | | | | | |
| | | H4G | 4-3/8-16 Square- flange,Pilot Ø44.4×2.54 Port M22x1.5 | | | | | | | |

Note:When the table is used, please fill the code of left rows in the table and give us, which the code information is consists of construction, displacement, mounting flange, output shaft and ports. If the specification is not in the table or you have specific requirements, please contract us.

# FPMJ SERIES HYDRAULIC MOTOR

FPMJ series motor adapt the advanced Geroler gear set designed with high speed distribution flow and high pressure, and have good stability in low speed , and can keep high volume efficiency. The unit can be supplied the individual variant in operating multifunction in accordance with requirement of applications.

*Characteristic features:*

- Advanced manufacturing devices for the Geroler gear set, which use low pressure of start-up, provide smooth and reliable operation and high efficiency.
- The output shaft adapts in needle roller bearings that permit high axial and radial forces. The case can offers capacities of high pressure and high torque in the wide of applications.
- Advanced design in high speed distribution flow, which can automatically compensate in operating with high volume efficiency and long life , provide smooth and reliable operation.
- Lowest leakage rate, most accurate timing methods. Commutator rotates 6x faster than shaft speed. It make the distribution in a high precision reduces life-cycle cost, maintain high volume efficiencies and can run very smoothly at low speed, gear box not required.

## *Main Specification*

| *Type* | | *FPMJ 65* | *FPMJ 80* | *FPMJ 100* | *FPMJ 125* | *FPMJ 160* | *FPMJ 200* | *FPMJ 230* | *FPMJ 250* | *FPMJ 295* | *FPMJ 315* | *FPMJ 375* |
|---|---|---|---|---|---|---|---|---|---|---|---|---|
| Displacement (cm³/rev) | | 66.8 | 81.3 | 101.6 | 127 | 157.2 | 193.6 | 226 | 257 | 287.8 | 314.5 | 370 |
| Max. speed (rpm) | cont. | 667 | 543 | 439 | 350 | 283 | 229 | 247 | 216 | 196 | 178 | 152 |
| | int. | 842 | 689 | 553 | 441 | 355 | 289 | 328 | 287 | 254 | 235 | 199 |
| Max. torque (Nm) | cont. | 126 | 157 | 191 | 245 | 307 | 382 | 378 | 381 | 393 | 448 | 439 |
| | int. | 176 | 215 | 268 | 335 | 422 | 520 | 528 | 543 | 547 | 587 | 613 |
| Max. output (kW) | cont. | 8.3 | 8.8 | 7.9 | 8.9 | 8.9 | 9 | 9.9 | 9.3 | 8.7 | 8 | 7.6 |
| | int. | 13.9 | 14.4 | 13.5 | 14.1 | 15.6 | 15.7 | 17.9 | 16.5 | 15.6 | 14.3 | 14 |
| Max. pressure (MPa) | cont. | 14 | 14 | 14 | 14 | 14 | 14 | 12 | 11 | 10 | 10 | 9 |
| | int. | 19 | 19 | 19 | 19 | 19 | 19 | 165 | 15.5 | 14.5 | 13.5 | 12.5 |
| | peak | 20 | 20 | 20 | 20 | 20 | 20 | 18 | 18 | 17 | 16 | 16 |
| Max. flow (L/min) | cont. | 45 | 45 | 45 | 45 | 45 | 45 | 57 | 57 | 57 | 57 | 57 |
| | int. | 57 | 57 | 57 | 57 | 57 | 57 | 75 | 75 | 75 | 75 | 75 |

- Continuous pressure: Max. value of operating motor continuously.
- Intermittent pressure : Max. value of operating motor in 6 seconds per

minute.

- Peak pressure: Max. value of operating motor in 0.6 second per minute

## *FPMJ - DIMENSIONS MOUNTING DATA*

Wheel Mount
Code : WS Ports A, B 7/8-14 O-Ring
Code : WD Ports A, B G1/2
Code : WM Ports A, B M22x1.5

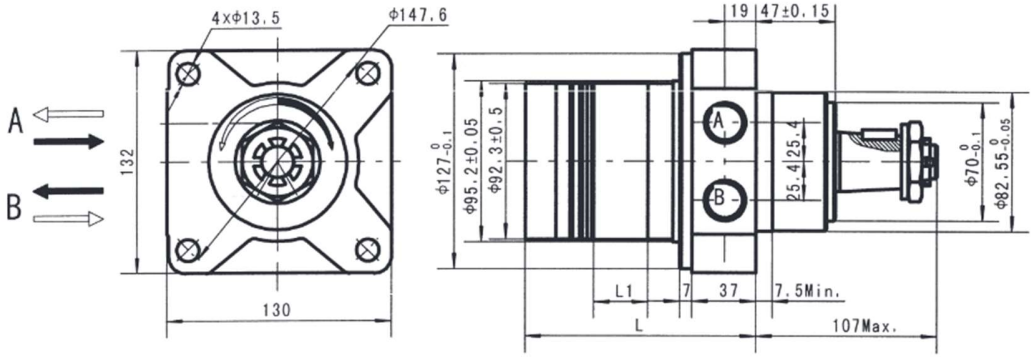


| *Displacement (cm³/rev)* | 65 | 80 | 100 | 125 | 160 | 200 | 230 | 250 | 295 | 315 | 375 |
|---|---|---|---|---|---|---|---|---|---|---|---|
| *L1 (mm)* | 13 | 16 | 20 | 25 | 30.5 | 38.1 | 44 | 50 | 56 | 62 | 74 |
| *L (mm)* | 115 | 118 | 122 | 127 | 132.5 | 140 | 146 | 152 | 158 | 164 | 176 |
| *Weight (kg)* | 9 | 9.1 | 10.4 | 10.6 | 10.9 | 11.3 | 11.8 | 12.2 | 12.6 | 12.9 | 13.4 |

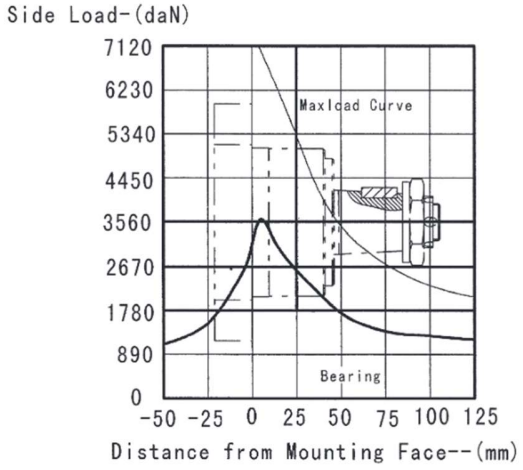


The bearing curve represents allowable bearing loads for an $L_{10}$ bearing life at $3 \times 10^6$ revolutions. The maximum load curve is defined by bearing static load capacity. This curve should not be exceeded at any time including shock loads.

# FPMJ - Shaft Extensions for Dimensions Data

Shaft T1

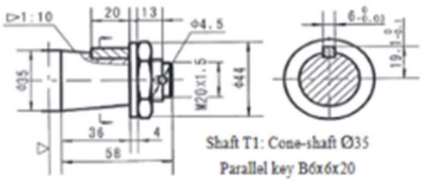

Shaft T1: Cone-shaft Ø35
Parallel key B6x6x20
Tightening torque:200±10Nm

Shaft B

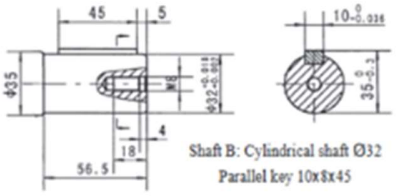

Shaft B: Cylindrical shaft Ø32
Parallel key 10x8x45

Shaft T3

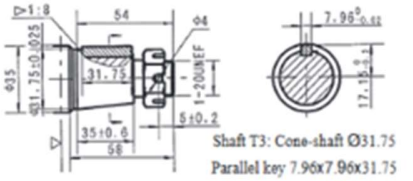

Shaft T3: Cone-shaft Ø31.75
Parallel key 7.96x7.96x31.75
Tightening torque:200±10Nm

Shaft T2

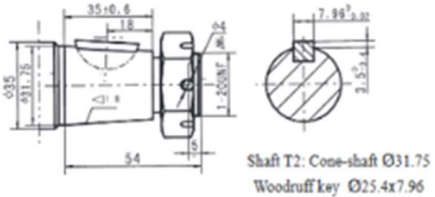

Shaft T2: Cone-shaft Ø31.75
Woodruff key Ø25.4x7.96

Shaft T4

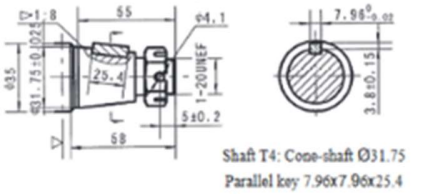

Shaft T4: Cone-shaft Ø31.75
Parallel key 7.96x7.96x25.4
Tightening torque:200±10Nm

▷ Motor Mounting Surface

# Order Information

FPMJ 1 – 2 – 3 – 4 – 5 – 6 – 7

| Pos.1 | 2 | 3 | | 4 | | | 5 | | 6 | | 7 | |
|---|---|---|---|---|---|---|---|---|---|---|---|---|
| Code | Disp. | Flange , Pilot , Ports | | Output Shaft | | | Rotation direction | | Paint | | Unusually function | |
| Omit | 65<br>80<br>100<br>125<br>160<br>200<br>230<br>250<br>295<br>315<br>375 | WS | 4-Ø13.5 Wheel-flange, Pilot Ø82.55x7, Port 7/8-14 O-ring | T1 | Cone-Shaft Ø35,Parallel key B6x6x20 | Omit | Standard | 00 | No paint | Omit | Standard |
| | | WD | 4-Ø13.5 Wheel-flange, Pilot Ø82.55x7, Port G1/2 | T2 | Cone-Shaft Ø31.75,Woodruff key ø25.4x7.96 | R | Opposite | Omit | Blue | | |
| | | WM | 4-Ø13.5 Wheel-flange, Pilot Ø82.55x7, Port M22x1.5 | T3 | Cone-Shaft Ø31.75,Parallel key 7.96x7.96x31.75 | | | B | Black | | |
| | | | | T4 | Cone-Shaft Ø31.75,Parallel key 7.96x7.96x25.4 | | | S | Sliver Grey | | |
| | | | | B | Cylindrical Shaft Ø32,Parallel key 10x8x45 | | | | | | |

Note:When the table is used, please fill the code of left rows in the table and give us, which the code information is consists of construction, displacement, mounting flange, output shaft and ports. If the specification is not in the table or you have specific requirements, please contact us.

# FPMER SERIES HYDRAULIC MOTOR

FPMER series motor adapt the advanced Geroler gear set designed with high speed distribution flow and high pressure, and have good stability in low speed , and can keep high volume efficiency. The unit can be supplied the individual variant in operating multifunction in accordance with requirement of applications.

*Characteristic features:*

- Advanced manufacturing devices for the Geroler gear set, which use low pressure of start-up, provide smooth and reliable operation and high efficiency.
- The output shaft adapts in needle roller bearings that permit high axial and radial forces. The case can offers capacities of high pressure and high torque in the wide of applications.
- Advanced design in high speed distribution flow, which can automatically compensate in operating with high volume efficiency and long life , provide smooth and reliable operation.
- Lowest leakage rate, most accurate timing methods. Commutator rotates 6x faster than shaft speed. It make the distribution in a high precision reduces life-cycle cost, maintain high volume efficiencies and can run very smoothly at low speed, gear box not required.

## Main Specification

| Type | | FPMER 125 | FPMER 160 | FPMER 200 | FPMER 230 | FPMER 250 | FPMER 300 | FPMER 350 | FPMER 375 | FPMER 400 | FPMER 475 | FPMER 540 | FPMER 650 | FPMER 750 |
|---|---|---|---|---|---|---|---|---|---|---|---|---|---|---|
| Displacement ($cm^3$/rev) | | 118 | 156 | 196 | 228 | 257 | 296 | 345 | 371 | 405 | 462 | 540 | 647 | 745 |
| Max. speed (rpm) | cont. | 360 | 375 | 330 | 290 | 290 | 250 | 220 | 200 | 185 | 160 | 140 | 115 | 100 |
| | int. | 490 | 470 | 425 | 365 | 350 | 315 | 270 | 240 | 220 | 195 | 170 | 138 | 120 |
| Max. torque (Nm) | cont. | 325 | 450 | 530 | 625 | 700 | 810 | 905 | 990 | 1010 | 1085 | 980 | 1015 | 1050 |
| | int. | 380 | 525 | 600 | 710 | 790 | 930 | 1035 | 1140 | 1180 | 1180 | 1240 | 1250 | 1180 |
| | peak | 450 | 590 | 750 | 870 | 980 | 1120 | 1285 | 1360 | 1360 | 1260 | 1380 | 1380 | 1370 |
| Max. output (kW) | cont. | 12.0 | 15.0 | 15.5 | 16.0 | 17.5 | 18.0 | 17.5 | 16.5 | 15.5 | 14.5 | 11.5 | 10.0 | 8.0 |
| | int. | 14.0 | 17.5 | 18.0 | 19.0 | 20.0 | 21.0 | 20.0 | 19.0 | 18.0 | 16.5 | 15.0 | 12.0 | 10.0 |
| Max. pressure drop (MPa) | cont. | 20.5 | 20.5 | 20.5 | 20.5 | 20.5 | 20.5 | 20.5 | 20.5 | 19 | 17.5 | 14 | 12 | 10.5 |
| | int. | 24 | 24 | 24 | 24 | 24 | 24 | 24 | 24 | 22.5 | 19 | 17.5 | 15.5 | 12 |
| | peak | 27.6 | 27.6 | 27.6 | 27.6 | 27.6 | 27.6 | 27.6 | 27.6 | 25 | 20.5 | 20.5 | 17.5 | 14 |
| Max. flow (L/min) | cont. | 45 | 60 | 70 | 70 | 75 | 80 | 80 | 75 | 75 | 75 | 75 | 75 | 75 |
| | int. | 60 | 75 | 85 | 85 | 90 | 95 | 95 | 90 | 90 | 90 | 90 | 90 | 90 |

- Continuous pressure: Max. value of operating motor continuously.
- Intermittent pressure: Max .value of operating motor in 6 seconds per minute.
- Peak pressure: Max. value of operating motor in 0.6 second per minute

FLUIDPARTS HYDRO-MOTORS

# *Performance Data*

## FPMER 125 [118 cm³/rev]

Pressure (MPa)

| Flow (L/min) | 1.75 | 3.5 | 7 | 10.5 | 14 | 17.5 | 20.5 | 24 |
|---|---|---|---|---|---|---|---|---|
| 2 | 20 | 50 | 96 | 137 | | | | |
| | **14** | **13** | **11** | **7** | | | | |
| 4 | 24 | 53 | 110 | 166 | 221 | | | |
| | **28** | **26** | **24** | **19** | **13** | | | |
| 8 | | 55 | 113 | 174 | 225 | 266 | 294 | 336 |
| | | **60** | **54** | **50** | **45** | **39** | **35** | **26** |
| 15 | | 53 | 114 | 180 | 234 | 275 | 326 | 348 |
| | | **115** | **110** | **100** | **96** | **90** | **84** | **76** |
| 25 | | 48 | 110 | 164 | 226 | 272 | 323 | 352 |
| | | **194** | **185** | **173** | **168** | **160** | **155** | **149** |
| 34 | | | 108 | 166 | 220 | 278 | 315 | 373 |
| | | | **276** | **260** | **244** | **232** | **225** | **217** |
| 45 | | | 98 | 160 | 215 | 271 | 308 | 369 |
| | | | **362** | **350** | **342** | **325** | **322** | **303** |
| Max.cont. 53 | | | 90 | 152 | 208 | 265 | 304 | |
| | | | **423** | **418** | **404** | **399** | **371** | |
| Max.int. 60 | | | 82 | 141 | 205 | 260 | 300 | |
| | | | **488** | **472** | **455** | **442** | **421** | |

## FPMER 160 [156 cm³/rev]

Pressure (MPa)

| Flow (L/min) | 1.75 | 3.5 | 7 | 10.5 | 14 | 17.5 | 20.5 | 24 |
|---|---|---|---|---|---|---|---|---|
| 2 | 35 | 74 | 146 | 218 | 298 | | | |
| | **8** | **4** | **3** | **3** | **2** | | | |
| 4 | 29 | 78 | 157 | 235 | 316 | 370 | 424 | |
| | **22** | **19** | **18** | **16** | **14** | **13** | **8** | |
| 8 | 35 | 78 | 158 | 236 | 312 | 373 | 450 | 526 |
| | **47** | **44** | **42** | **40** | **37** | **34** | **32** | **27** |
| 15 | 37 | 74 | 155 | 234 | 310 | 368 | 440 | 517 |
| | **93** | **90** | **86** | **84** | **82** | **79** | **75** | **69** |
| 25 | | 68 | 152 | 227 | 308 | 364 | 436 | 499 |
| | | **155** | **151** | **147** | **142** | **137** | **131** | **124** |
| 34 | | 68 | 152 | 227 | 308 | 364 | 436 | 499 |
| | | **214** | **213** | **210** | **204** | **198** | **191** | **184** |
| 45 | | 64 | 143 | 218 | 296 | 360 | 425 | 481 |
| | | **282** | **280** | **275** | **268** | **263** | **256** | **245** |
| 53 | | | 135 | 216 | 293 | 357 | 421 | 476 |
| | | | **330** | **327** | **322** | **315** | **306** | **296** |
| Max.cont. 60 | | | 122 | 207 | 284 | 350 | 416 | 467 |
| | | | **379** | **376** | **368** | **362** | **356** | **345** |
| 68 | | | 109 | 196 | 273 | 345 | 396 | |
| | | | **423** | **419** | **414** | **406** | **394** | |
| Max.int. 75 | | | 104 | 188 | 270 | 337 | 390 | |
| | | | **472** | **466** | **460** | **450** | **436** | |

## FPMER 200 [196 cm³/rev]

Pressure (MPa)

| Flow (L/min) | 1.75 | 3.5 | 7 | 10.5 | 14 | 17.5 | 20.5 | 24 |
|---|---|---|---|---|---|---|---|---|
| 2 | 39 | 88 | 132 | 286 | 370 | | | |
| | **8** | **4** | **4** | **3** | **2** | | | |
| 4 | 42 | 85 | 188 | 270 | 361 | 427 | 506 | |
| | **16** | **14** | **13** | **11** | **10** | **9** | **6** | |
| 8 | 43 | 90 | 192 | 291 | 367 | 450 | 529 | 600 |
| | **35** | **32** | **29** | **28** | **27** | **25** | **23** | **19** |
| 15 | 38 | 92 | 196 | 298 | 381 | 462 | 530 | 602 |
| | **74** | **71** | **68** | **64** | **60** | **58** | **55** | **50** |
| 25 | | 82 | 188 | 283 | 377 | 456 | 528 | 605 |
| | | **124** | **121** | **117** | **113** | **108** | **103** | **92** |
| 34 | | 79 | 183 | 270 | 362 | 447 | 515 | 591 |
| | | **170** | **169** | **167** | **160** | **154** | **146** | **135** |
| 45 | | | 163 | 259 | 352 | 441 | 510 | 593 |
| | | | **223** | **218** | **212** | **208** | **199** | **189** |
| 53 | | | 149 | 256 | 350 | 440 | 501 | 582 |
| | | | **260** | **258** | **254** | **248** | **241** | **230** |
| 60 | | | 132 | 248 | 336 | 432 | 497 | 575 |
| | | | **299** | **292** | **284** | **276** | **272** | **263** |
| Max.cont. 68 | | | 120 | 230 | 330 | 412 | 486 | 570 |
| | | | **336** | **332** | **327** | **319** | **310** | **301** |
| 75 | | | 108 | 208 | 311 | 403 | 480 | |
| | | | **375** | **372** | **365** | **358** | **350** | |
| Max.int. 85 | | | | 184 | 280 | 380 | 462 | |
| | | | | **425** | **420** | **411** | **390** | |

Torque (N•m) 380
Speed (rpm) **411**

## FPMER 230 [228 cm³/rev]

Pressure (MPa)

| Flow (L/min) | 1.75 | 3.5 | 7 | 10.5 | 14 | 17.5 | 20.5 | 24 |
|---|---|---|---|---|---|---|---|---|
| 2 | 44 | 90 | 182 | 291 | 374 | | | |
| | **6** | **4** | **3** | **2** | **1** | | | |
| 4 | 48 | 100 | 216 | 310 | 405 | 484 | 549 | |
| | **15** | **13** | **11** | **11** | **9** | **7** | **3** | |
| 8 | 50 | 104 | 212 | 320 | 421 | 518 | 603 | 700 |
| | **31** | **29** | **27** | **25** | **23** | **20** | **16** | **10** |
| 15 | 44 | 106 | 207 | 318 | 426 | 529 | 623 | 712 |
| | **63** | **61** | **58** | **55** | **52** | **47** | **41** | **34** |
| 25 | | 101 | 209 | 324 | 428 | 532 | 620 | 705 |
| | | **103** | **100** | **96** | **92** | **87** | **81** | **71** |
| 34 | | 88 | 205 | 316 | 421 | 522 | 623 | 702 |
| | | **145** | **143** | **139** | **133** | **126** | **120** | **109** |
| 45 | | | 186 | 294 | 422 | 507 | 595 | 688 |
| | | | **192** | **187** | **182** | **176** | **170** | **160** |
| 53 | | | 175 | 290 | 393 | 496 | 584 | 678 |
| | | | **226** | **221** | **215** | **208** | **203** | **194** |
| 60 | | | 152 | 270 | 390 | 485 | 569 | 661 |
| | | | **256** | **253** | **248** | **242** | **235** | **222** |
| Max.cont. 68 | | | 140 | 265 | 351 | 482 | 563 | 642 |
| | | | **292** | **288** | **283** | **278** | **273** | **256** |
| 75 | | | 124 | 235 | 344 | 448 | 552 | |
| | | | **324** | **321** | **316** | **308** | **300** | |
| Max.int. 85 | | | | 207 | 335 | 442 | 546 | |
| | | | | **366** | **360** | **351** | **338** | |

cont.
int.

## FPMER 250 [257 cm³/rev]

Pressure (MPa)

| Flow (L/min) | 1.75 | 3.5 | 7 | 10.5 | 14 | 17.5 | 20.5 (Max.cont.) | 24 (Max.int.) |
|---|---|---|---|---|---|---|---|---|
| 2 | 48 | 111 | | | | | | |
| | **5** | **2** | | | | | | |
| 4 | 54 | 113 | 237 | 362 | 471 | 570 | 642 | |
| | **12** | **11** | **10** | **9** | **8** | **6** | **3** | |
| 8 | 54 | 115 | 244 | 366 | 482 | 587 | 688 | |
| | **27** | **26** | **24** | **22** | **20** | **18** | **14** | |
| 15 | 50 | 113 | 256 | 367 | 485 | 591 | 692 | 794 |
| | **57** | **56** | **54** | **51** | **48** | **45** | **43** | **37** |
| 25 | 44 | 114 | 241 | 360 | 488 | 593 | 699 | 782 |
| | **95** | **93** | **90** | **86** | **82** | **77** | **72** | **63** |
| 34 | | 95 | 226 | 348 | 481 | 590 | 686 | 774 |
| | | **129** | **125** | **121** | **116** | **111** | **106** | **96** |
| 45 | | 77 | 215 | 346 | 468 | 572 | 674 | 779 |
| | | **174** | **173** | **170** | **166** | **161** | **155** | **143** |
| 53 | | 66 | 200 | 325 | 448 | 564 | 657 | 756 |
| | | **203** | **202** | **200** | **196** | **190** | **184** | **175** |
| 60 | | | 180 | 296 | 438 | 550 | 642 | 741 |
| | | | **232** | **229** | **225** | **220** | **215** | **202** |
| 68 | | | 162 | 294 | 415 | 548 | 637 | 730 |
| | | | **262** | **261** | **257** | **250** | **241** | **228** |
| 75 (Max.cont.) | | | 137 | 274 | 388 | 520 | 618 | 726 |
| | | | **290** | **289** | **285** | **280** | **273** | **260** |
| 85 | | | 130 | 261 | 370 | 509 | 604 | |
| | | | **328** | **326** | **322** | **316** | **307** | |
| 90 (Max.int.) | | | 85 | 224 | 358 | 490 | | |
| | | | **348** | **347** | **344** | **336** | | |

## FPMER 300 [296 cm³/rev]

Pressure (MPa)

| Flow (L/min) | 1.75 | 3.5 | 7 | 10.5 | 14 | 17.5 | 20.5 (Max.cont.) | 24 (Max.int.) |
|---|---|---|---|---|---|---|---|---|
| 2 | 50 | 93 | | | | | | |
| | **3** | **1** | | | | | | |
| 4 | 62 | 141 | 294 | 429 | 502 | 618 | | |
| | **11** | **10** | **9** | **8** | **7** | **4** | | |
| 8 | 63 | 147 | 298 | 432 | 565 | 667 | 761 | 819 |
| | **22** | **21** | **20** | **19** | **16** | **13** | **9** | **5** |
| 15 | 66 | 144 | 305 | 427 | 568 | 671 | 810 | 894 |
| | **48** | **47** | **45** | **43** | **39** | **33** | **28** | **20** |
| 25 | 59 | 138 | 289 | 420 | 552 | 676 | 791 | 932 |
| | **82** | **81** | **80** | **76** | **71** | **64** | **56** | **44** |
| 34 | 48 | 130 | 297 | 393 | 562 | 689 | 805 | 926 |
| | **113** | **112** | **110** | **107** | **102** | **96** | **86** | **73** |
| 45 | | 96 | 268 | 385 | 527 | 636 | 753 | 880 |
| | | **150** | **149** | **148** | **143** | **135** | **124** | **112** |
| 53 | | 76 | 242 | 383 | 524 | 631 | 758 | 900 |
| | | **177** | **176** | **175** | **173** | **165** | **152** | **138** |
| 60 | | 64 | 225 | 362 | 506 | 627 | 753 | 892 |
| | | **200** | **199** | **198** | **193** | **186** | **174** | **162** |
| 68 | | | 200 | 333 | 470 | 630 | 750 | 882 |
| | | | **225** | **224** | **222** | **212** | **201** | **194** |
| 75 (Max.cont.) | | | 178 | 322 | 464 | 610 | 741 | 870 |
| | | | **251** | **250** | **247** | **240** | **232** | **215** |
| 85 | | | 140 | 316 | 455 | 570 | 728 | |
| | | | **285** | **284** | **278** | **270** | **257** | |
| 95 (Max.int.) | | | 106 | 260 | 431 | 552 | 700 | |
| | | | **316** | **314** | **311** | **307** | **292** | |

## FPMER 350 [345 cm³/rev]

Pressure (MPa)

| Flow (L/min) | 1.75 | 3.5 | 7 | 10.5 | 14 | 17.5 | 20.5 (Max.cont.) | 24 (Max.int.) |
|---|---|---|---|---|---|---|---|---|
| 2 | 63 | 133 | | | | | | |
| | **4** | **4** | | | | | | |
| 4 | 64 | 135 | 290 | 440 | | | | |
| | **10** | **9** | **8** | **7** | | | | |
| 8 | 68 | 146 | 310 | 458 | 589 | 735 | 847 | |
| | **21** | **20** | **20** | **19** | **18** | **16** | **12** | |
| 15 | 72 | 150 | 314 | 468 | 627 | 769 | 880 | 984 |
| | **42** | **41** | **40** | **39** | **37** | **35** | **32** | **26** |
| 25 | 63 | 148 | 313 | 470 | 628 | 765 | 892 | 1018 |
| | **70** | **69** | **68** | **66** | **63** | **60** | **55** | **46** |
| 34 | 52 | 133 | 304 | 455 | 619 | 760 | 905 | 1034 |
| | **97** | **96** | **95** | **93** | **89** | **85** | **78** | **68** |
| 45 | | 100 | 261 | 442 | 583 | 736 | 887 | 1028 |
| | | **129** | **128** | **127** | **125** | **118** | **112** | **101** |
| 53 | | 85 | 247 | 418 | 566 | 715 | 880 | 1024 |
| | | **152** | **150** | **148** | **145** | **139** | **132** | **118** |
| 60 | | 65 | 233 | 410 | 550 | 712 | 842 | 996 |
| | | **171** | **170** | **169** | **167** | **162** | **155** | **143** |
| 68 | | | 218 | 387 | 543 | 696 | 825 | 976 |
| | | | **195** | **194** | **190** | **185** | **175** | **162** |
| 75 (Max.cont.) | | | 206 | 373 | 515 | 680 | 822 | 966 |
| | | | **215** | **214** | **212** | **206** | **197** | **183** |
| 85 | | | 176 | 355 | 510 | 679 | 808 | |
| | | | **243** | **242** | **239** | **234** | **227** | |
| 95 (Max.int.) | | | | 353 | 509 | 645 | | |
| | | | | **272** | **269** | **265** | | |

Torque (N•m) 645
Speed (rpm) **265**

## FPMER 375 [371 cm³/rev]

Pressure (MPa)

| Flow (L/min) | 1.75 | 3.5 | 7 | 10.5 | 14 | 17.5 | 20.5 (Max.cont.) | 24 (Max.int.) |
|---|---|---|---|---|---|---|---|---|
| 2 | 75 | | | | | | | |
| | **3** | | | | | | | |
| 4 | 83 | 160 | 330 | 488 | 636 | 761 | | |
| | **8** | **8** | **7** | **6** | **5** | **3** | | |
| 8 | 81 | 170 | 356 | 527 | 679 | 822 | 948 | 1060 |
| | **18** | **17** | **17** | **16** | **14** | **12** | **9** | **5** |
| 15 | 76 | 162 | 356 | 533 | 683 | 845 | 978 | 1102 |
| | **39** | **38** | **37** | **35** | **32** | **29** | **25** | **18** |
| 25 | 68 | 156 | 350 | 524 | 680 | 857 | 994 | 1138 |
| | **65** | **64** | **62** | **59** | **55** | **48** | **44** | **35** |
| 34 | 58 | 148 | 339 | 506 | 690 | 841 | 993 | 1145 |
| | **90** | **89** | **87** | **83** | **77** | **71** | **63** | **53** |
| 45 | | 121 | 302 | 478 | 650 | 813 | 972 | 1134 |
| | | **120** | **119** | **117** | **113** | **108** | **100** | **90** |
| 53 | | 95 | 282 | 466 | 628 | 785 | 934 | 1103 |
| | | **141** | **140** | **138** | **134** | **128** | **120** | **105** |
| 60 | | 75 | 264 | 428 | 592 | 766 | 925 | 1070 |
| | | **161** | **161** | **160** | **158** | **155** | **151** | **141** |
| 68 | | | 232 | 422 | 585 | 756 | 901 | 1066 |
| | | | **182** | **180** | **176** | **169** | **161** | **148** |
| 75 (Max.cont.) | | | 207 | 380 | 556 | 738 | 865 | 1012 |
| | | | **201** | **200** | **197** | **190** | **181** | **165** |
| 85 | | | 175 | 370 | 526 | 700 | 832 | |
| | | | **228** | **226** | **221** | **216** | **206** | |
| 90 (Max.int.) | | | 148 | 316 | 500 | 654 | | |
| | | | **242** | **240** | **237** | **226** | | |

cont.
int.

## FPMER 400 [405 cm³/rev]

Pressure (MPa)

| Flow (L/min) | 1.75 | 3.5 | 7 | 10.5 | 14 | 17.5 (Max.cont.) | 19 | 22.5 (Peak) |
|---|---|---|---|---|---|---|---|---|
| 2 | 85<br>**3** | 170<br>**2** | | | | | | |
| 4 | 90<br>**8** | 182<br>**7** | 368<br>**6** | 540<br>**5** | 715<br>**4** | 885<br>**3** | | |
| 8 | 93<br>**17** | 190<br>**16** | 385<br>**15** | 575<br>**14.4** | 750<br>**13** | 895<br>**10** | 950<br>**9** | 1155<br>**7** |
| 15 | 88<br>**36** | 180<br>**35** | 380<br>**34** | 575<br>**33** | 750<br>**31** | 905<br>**28** | 980<br>**24** | 1165<br>**20** |
| 25 | 88<br>**60** | 180<br>**59** | 380<br>**58** | 575<br>**56** | 750<br>**53** | 915<br>**49** | 1010<br>**44** | 1165<br>**40** |
| 34 | 75<br>**83** | 165<br>**83** | 365<br>**82** | 560<br>**81** | 750<br>**77** | 915<br>**72** | 1000<br>**68** | 1180<br>**60** |
| 45 | | 150<br>**110** | 350<br>**110** | 545<br>**109** | 735<br>**106** | 900<br>**102** | 980<br>**94** | 1165<br>**86** |
| 53 | | 125<br>**130** | 330<br>**129** | 525<br>**128** | 720<br>**125** | 885<br>**120** | 960<br>**112** | 1150<br>**100** |
| 60 | | 100<br>**147** | 305<br>**147** | 505<br>**146** | 680<br>**145** | 860<br>**142** | 940<br>**138** | 1125<br>**130** |
| 68 | | | 275<br>**167** | 480<br>**167** | 660<br>**164** | 845<br>**158** | 925<br>**150** | 1100<br>**140** |
| 75 (Max. cont.) | | | 250<br>**184** | 455<br>**183** | 635<br>**180** | 820<br>**176** | 900<br>**170** | 1065<br>**158** |
| 85 | | | 225<br>**209** | 415<br>**208** | 600<br>**206** | 785<br>**202** | 865<br>**194** | |
| 90 (Max.int.) | | | 160<br>**220** | 365<br>**218** | 575<br>**216** | 770<br>**210** | | |

## FPMER 475 [462 cm³/rev]

Pressure (MPa)

| Flow (L/min) | 1.75 | 3.5 | 7 | 10.5 | 14 | 17.5 (Max.cont.) | 20.5 (Peak) |
|---|---|---|---|---|---|---|---|
| 2 | 93<br>**2** | 186<br>**1** | | | | | |
| 4 | 98<br>**7** | 202<br>**6** | 405<br>**5** | 608<br>**5** | 805<br>**4** | | |
| 8 | 98<br>**15** | 206<br>**14** | 430<br>**13** | 652<br>**13** | 844<br>**12** | 1005<br>**10** | 1180<br>**8** |
| 15 | 94<br>**31** | 202<br>**30** | 441<br>**28** | 654<br>**28** | 875<br>**26** | 1056<br>**23** | 1238<br>**20** |
| 25 | 94<br>**52** | 202<br>**51** | 441<br>**48** | 654<br>**45** | 875<br>**43** | 1056<br>**39** | 1238<br>**35** |
| 34 | 75<br>**72** | 180<br>**71** | 420<br>**68** | 660<br>**65** | 850<br>**61** | 1085<br>**55** | 1266<br>**44** |
| 45 | | 144<br>**96** | 380<br>**95** | 627<br>**93** | 835<br>**90** | 1062<br>**84** | 1261<br>**73** |
| 53 | | 116<br>**113** | 346<br>**112** | 573<br>**111** | 795<br>**107** | 1008<br>**102** | 1212<br>**90** |
| 60 | | 82<br>**128** | 318<br>**128** | 539<br>**127** | 790<br>**124** | 975<br>**119** | 1186<br>**110** |
| 68 | | 58<br>**146** | 272<br>**145** | 520<br>**144** | 740<br>**141** | 955<br>**136** | 1156<br>**125** |
| 75 (Max. cont.) | | | 230<br>**161** | 480<br>**160** | 702<br>**158** | 920<br>**153** | 1116<br>**140** |
| 85 | | | 200<br>**182** | 454<br>**180** | 662<br>**177** | 876<br>**168** | |
| 90 (Max.int.) | | | 150<br>**194** | 378<br>**193** | 615<br>**190** | 840<br>**182** | |

## FPMER 540 [540 cm³/rev]

Pressure (MPa)

| Flow (L/min) | 1.75 | 3.5 | 7 | 10.5 | 14 (Max.cont.) | 17.5 (Max.int.) |
|---|---|---|---|---|---|---|
| 2 | 105<br>**2** | 198<br>**2** | | | | |
| 4 | 125<br>**6** | 231<br>**5** | 470<br>**5** | 688<br>**4** | 932<br>**4** | 1136<br>**3** |
| 8 | 134<br>**13** | 238<br>**13** | 496<br>**12** | 749<br>**11** | 966<br>**11** | 1175<br>**8** |
| 15 | 122<br>**27** | 230<br>**26** | 505<br>**26** | 750<br>**25** | 981<br>**24** | 1218<br>**21** |
| 25 | 100<br>**44** | 225<br>**43** | 500<br>**42** | 774<br>**41** | 986<br>**39** | 1220<br>**35** |
| 34 | 80<br>**62** | 212<br>**61** | 481<br>**60** | 748<br>**58** | 977<br>**54** | 1243<br>**49** |
| 45 | | 173<br>**82** | 437<br>**82** | 714<br>**81** | 936<br>**79** | 1190<br>**75** |
| 53 | | 142<br>**97** | 416<br>**97** | 678<br>**96** | 938<br>**94** | 1170<br>**89** |
| 60 | | 106<br>**110** | 380<br>**110** | 664<br>**109** | 896<br>**108** | 1158<br>**106** |
| 68 | | 85<br>**125** | 357<br>**124** | 616<br>**124** | 870<br>**123** | 1108<br>**120** |
| 75 (Max. cont.) | | | 318<br>**138** | 600<br>**137** | 826<br>**135** | 1100<br>**132** |
| 85 | | | 292<br>**154** | 538<br>**153** | 780<br>**152** | |
| 90 (Max.int.) | | | 214<br>**169** | 486<br>**168** | 755<br>**168** | |

Torque (N•m) 486
Speed (rpm) **168**

## FPMER 650 [647 cm³/rev]

Pressure (MPa)

| Flow (L/min) | 1.75 | 3.5 | 7 | 10.5 (Max.cont.) | 12 (Max.int.) | 15.5 (Peak) |
|---|---|---|---|---|---|---|
| 2 | 119<br>**2** | 230<br>**1** | | | | |
| 4 | 135<br>**5** | 268<br>**5** | 552<br>**4** | 805<br>**4** | 940<br>**3** | |
| 8 | 145<br>**11** | 285<br>**11** | 574<br>**10** | 825<br>**10** | 955<br>**9** | 1255<br>**7** |
| 15 | 140<br>**22** | 280<br>**22** | 595<br>**21** | 875<br>**21** | 982<br>**20** | 1276<br>**16** |
| 25 | 130<br>**37** | 275<br>**36** | 590<br>**36** | 886<br>**35** | 1005<br>**34** | 1302<br>**30** |
| 34 | 115<br>**51** | 260<br>**51** | 580<br>**50** | 890<br>**49** | 1015<br>**47** | 1310<br>**44** |
| 45 | | 235<br>**69** | 555<br>**68** | 870<br>**67** | 995<br>**66** | 1280<br>**63** |
| 53 | | 200<br>**80** | 520<br>**80** | 850<br>**79** | 975<br>**78** | 1250<br>**76** |
| 60 | | 170<br>**91** | 490<br>**91** | 825<br>**90** | 935<br>**89** | 1215<br>**88** |
| 68 | | 145<br>**104** | 430<br>**103** | 775<br>**102** | 880<br>**101** | 1185<br>**99** |
| 75 (lax.cont.) | | | 420<br>**114** | 730<br>**113** | 855<br>**112** | 1130<br>**110** |
| 83 | | | 380<br>**130** | 660<br>**129** | 795<br>**128** | |
| 90 (Max.int.) | | | 290<br>**138** | 585<br>**137** | 730<br>**136** | |

FPMER 750 [745 cm³/rev]

| Flow (L/min) | Pressure (MPa) 1.75 | 3.5 | 7 | 10.5 (Max.cont.) | 12 (Max.int.) | 14 (Peak) |
|---|---|---|---|---|---|---|
| 2 | 145 **2** | 280 **1** | | | | |
| 4 | 160 **4** | 321 **4** | 654 **4** | 960 **3** | 1115 **3** | 1312 **2** |
| 8 | 162 **9** | 335 **9** | 688 **9** | 1026 **8** | 1159 **8** | 1347 **7** |
| 15 | 156 **19** | 330 **19** | 694 **18** | 1047 **18** | 1184 **17** | 1376 **16** |
| 25 | 142 **32** | 320 **31** | 688 **30** | 1046 **30** | 1179 **29** | 1373 **27** |
| 34 | 110 **44** | 288 **44** | 658 **42** | 1021 **41** | 1169 **40** | 1366 **37** |
| 45 | 71 **60** | 242 **59** | 620 **59** | 982 **58** | 1143 **58** | 1345 **55** |
| 53 | | 202 **70** | 568 **69** | 941 **68** | 1105 **67** | 1308 **66** |
| 60 | | 140 **79** | 527 **78** | 898 **77** | 1086 **76** | 1286 **74** |
| 68 | | 100 **90** | 486 **90** | 852 **89** | 1034 **88** | 1251 **87** |
| 75 (Max.cont.) | | 65 **99** | 425 **99** | 812 **98** | 980 **97** | 1178 **96** |
| 83 | | | 395 **110** | 745 **109** | 906 **108** | |
| 90 (Max.int.) | | | 298 **120** | 660 **119** | 800 **117** | |

cont.
int.

## *FPMER-2 - DIMENSIONS MOUNTING DATA*

Magneto Mount 4—Hole
Code: Port A、B
MS 7/8—14UNF
MP 1/2—14NPTF
MD G1/2

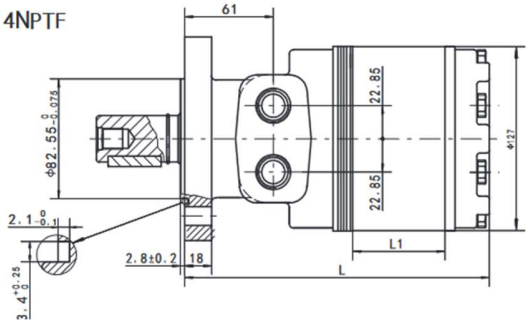


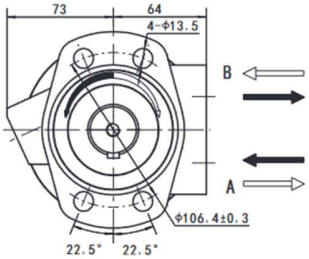

Magneto Mount 6–Hole
Code: Port A、B
FS 7/8–14UNF
FP 1/2–14NPTF
FD G1/2

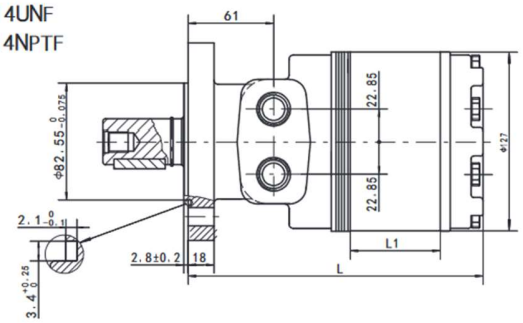


Magneto Mount 6–Hole
Code:Manifold Port A、B
FH Ø12.7

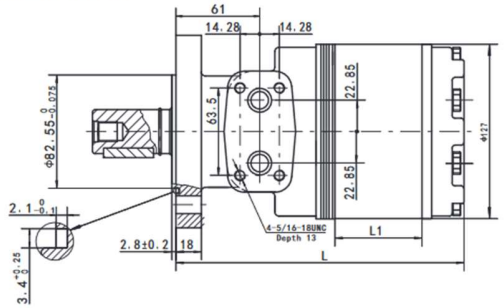


| *Displacement (cm³/rev)* | 125 | 160 | 200 | 230 | 250 | 300 | 350 | 375 | 400 | 475 | 540 | 650 | 750 |
|---|---|---|---|---|---|---|---|---|---|---|---|---|---|
| *L1 (mm)* | 10.2 | 13.5 | 17 | 19.5 | 22 | 25.4 | 29.5 | 31.8 | 35.5 | 39.4 | 47.3 | 57 | 63.5 |
| *L (mm)* | 157 | 160 | 163.5 | 166 | 168.5 | 172 | 176 | 178.5 | 182 | 186 | 194 | 204 | 210 |
| *Weight (kg)* | 10.6 | 10.9 | 11.2 | 11.3 | 11.4 | 11.6 | 12 | 12.5 | 12.7 | 13 | 13.5 | 14.5 | 15 |

Wheel Mount
Code: Port A、B
WS 7/8—14UNF
WP 1/2—14NPTF
WD G1/2

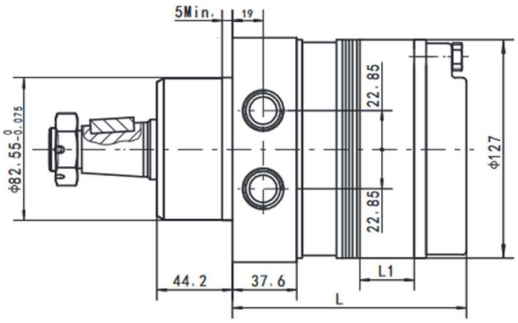


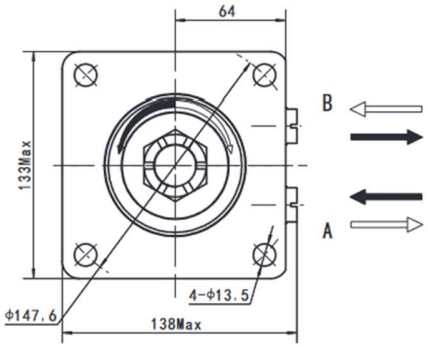


Wheel Mount
Code: Port A、B
TS 7/8—14UNF
TP 1/2—14NPTF
TD G1/2

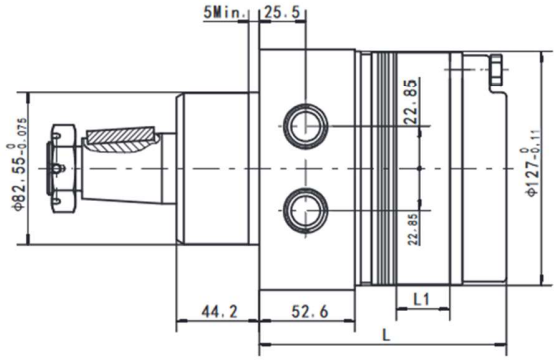


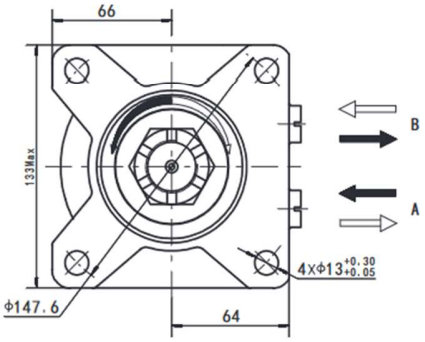


| *Displacement (cm³/rev)* | 125 | 160 | 200 | 230 | 250 | 300 | 350 | 375 | 400 | 475 | 540 | 650 | 750 |
|---|---|---|---|---|---|---|---|---|---|---|---|---|---|
| *L1 (mm)* | 10.2 | 13.5 | 17 | 19.5 | 22 | 25.4 | 29.5 | 31.8 | 35.5 | 39.4 | 47.3 | 57 | 63.5 |
| *L (mm)* | 119 | 122 | 125.5 | 128 | 130.5 | 134.5 | 138 | 140.5 | 144 | 148 | 156 | 166 | 173 |
| *Weight (kg)* | 12 | 12.1 | 12.3 | 12.4 | 12.6 | 13 | 13.2 | 13.5 | 13.7 | 14 | 14.6 | 15.5 | 16 |

# FPMER-2 - SHAFT EXTENSIONS DIMENSIONS DATA

Shaft G2

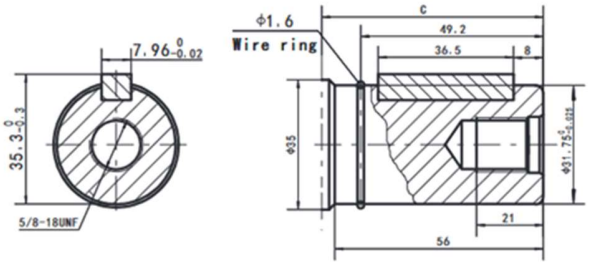


Shaft G2: Cylindrical shaft Ø31.75
Parallel key 7.96x7x36.5

Shaft B1

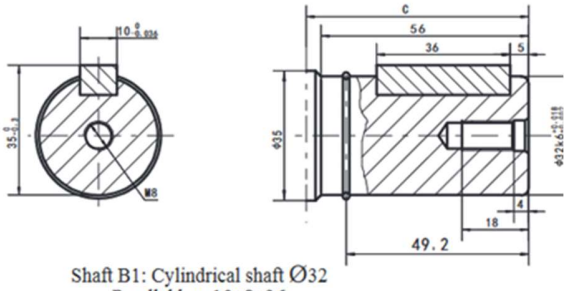


Shaft B1: Cylindrical shaft Ø32
Parallel key 10x8x36

Shaft FD1

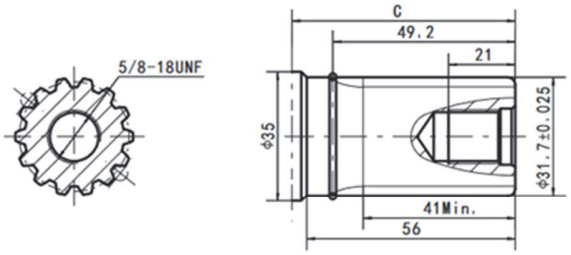


Shaft FD1: Splined 14-DP12/24
Flat root side fit
to fit ANSI B92.1 1996

Shaft T4

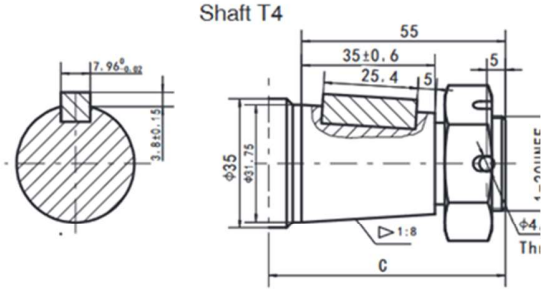


Shaft T4: Cone-shaft Ø31.75
Parallel key 7.96x7.96x25.4
Tightening torque:200±10Nm

Shaft RW

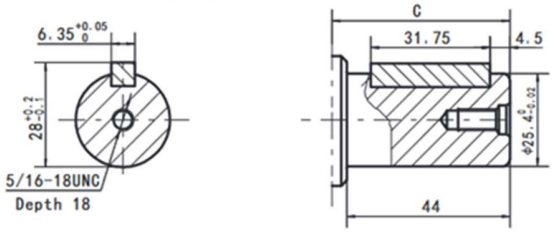


Shaft RW: Cylindrical shaft Ø25.4
Parallel key 6.35x6.35x31.75

Shaft AW

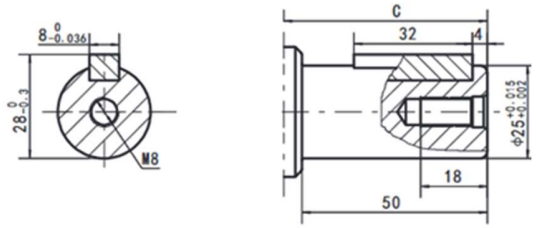


Shaft AW: Cylindrical shaft Ø25
Parallel key 8x7x32

Shaft SW

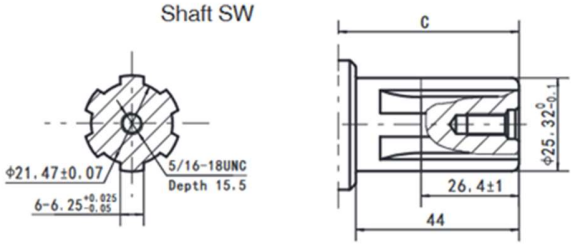


Shaft SW: Splined SAE 6B

| From Mounting Flange to Shaft End | | |
|---|---|---|
| Dimension C | | |
| Shaft Code | Magneto Mount (mm) | Wheel Mount (mm) |
| G2 | 61 | 103 |
| B1 | 61 | 103 |
| FD1 | 61 | 103 |
| T4 | 65 | 107 |
| RW | 50 | 91 |
| AW | 56 | 97 |
| SW | 50 | 91 |

FPMER-2 can be configured Φ38.1 shaft seal. Shaft type T31 and M1 and G32. Please consuit the sales manager.

## *Direction of shaft rotation: Reverse timed*

When facing shaft end of motor, shaft to rotate:

- Clockwise when port "B" is pressurized.
- Counter-clockwise when port "A" is pressurized.

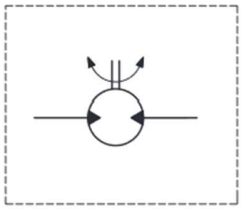

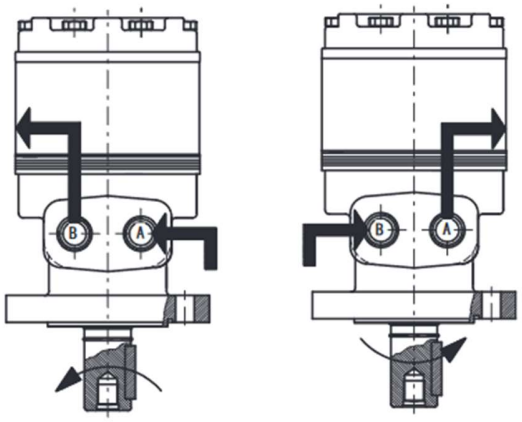


## *Direction of shaft rotation: Standard*

When facing shaft end of motor,shaft to rotate:

- Clockwise when port “A" is pressurized.
- Counter-clockwise when port “B" is pressurized.

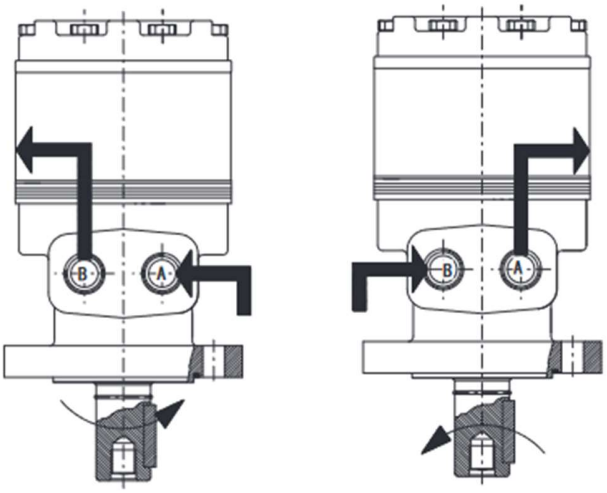

## *Axial and Radial Forces*

*FPMER-2 for M#/F# Mounting*

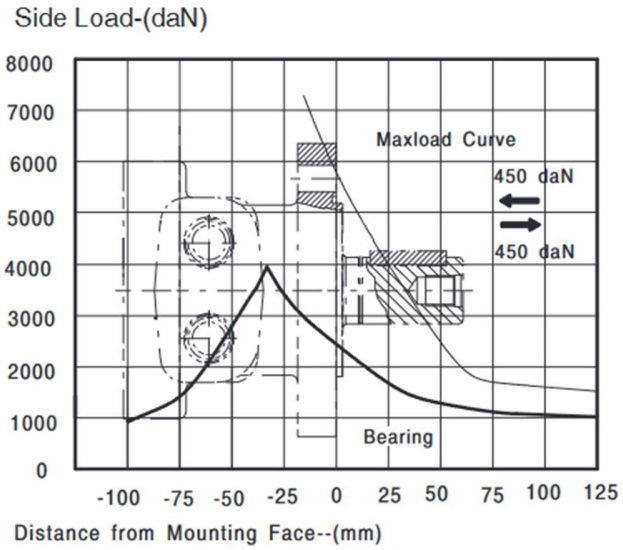


*FPMER-2 for W# Mounting*

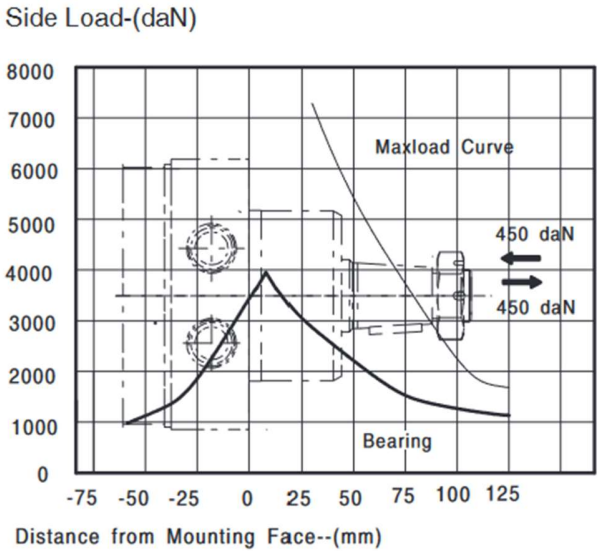


The bearing curve represents allowable bearing loads for an $L_{10}$ bearing life at $12x10^6$ revolutions. The maximum load curve is defined by bearing static load capacity. This curve should not be exceeded at any time including shock loads.

# Order *Information*

FPMER [1] – [2] – [3] – [4] – [5] – [6] – [7]

| Pos.1 | 2 | 3 | | 4 | | 5 | | 6 | | 7 |
|---|---|---|---|---|---|---|---|---|---|---|
| Code | Disp. | Flange , Pilot , Ports | | Output Shaft | | Rotation direction | | Paint | | Unusually function |
| 2 | 125 | MS | 4-Ø13.5 Magneto Mount,Pilot Ø82.55x2.8, Ports 7/8-14 O-ring | G2 | Shaft Ø31.75 , parllel key 7.96x7x36.5 | None | Standard | 00 | No paint | None |
| | 160 | MP | 4-Ø13.5 Magneto Mount,Pilot Ø82.55x2.8, Ports 1/2-14NPTF | B1 | Shaft032, Parallel key 10x8x45 | R | Reverse | None | Blue | Standard |
| | 200 | MD | 4-Ø13.5 Magneto Mount,Pilot Ø82.55x2.8, Ports G1/2 | FD1 | Shaft Ø31.75, splined key 14-DP12/24 | | Timed | B | Black | |
| | 230 | FS | 6-Ø13.5 Magneto Mount,Pilot Ø82.55x2.8, Ports 7/8-14 O-ring | T4 | Cone-Shaft Ø31.75, Parallel key 7.96x7.96x25.4 | | | S | Silver Grey | |
| | 250 | FP | 6-Ø13.5 Magneto Mount,Pilot Ø82.55x2.8, Ports 1/2-14NPTF | RW | Shaft Ø25.4 , parllel key 6.35x6.35x31.75 | | | | | |
| | 300 | FD | 6-Ø13.5 Magneto Mount,Pilot Ø82.55x2.8, Ports G1/2 | AW | Shaft Ø25 , parllel key 8x7x32 | | | | | |
| | 350 | FH | 6-Ø13.5 Magneto Mount,Pilot Ø82.55x2.8, Manifold Ports 1/2 | SW | Shaft Ø25.4 ,splined key SAE 6B | | | | | |
| | 375 | WS | 4-Ø13.5 Wheel Mount, Pilot Ø82.55x5, Ports 7/8-14 O-ring | M1 | Shaft035, Parallel key 10x8x45 | | | | | |
| | 400 | WP | 4-Ø13.5 Wheel Mount, Pilot Ø82.55x5, Ports 1/2-14NPTF | T31 | Cone-Shaft Ø38.1, Parallel key 7.96x7x36.5 | | | | | |
| | 475 | WD | 4-Ø13.5 Wheel Mount, Pilot Ø82.55x5, Ports G1/2 | G32 | Shaft Ø38.1 , parllel key 9.525x9.525x42 | | | | | |
| | 540 | TS | 4-Ø13.5 Wheel Mount,Pilot Ø82.55x5, Ports 7/8-14 O-ring | | | | | | | |
| | 650 | TP | 4-Ø13.5 Wheel Mount, Pilot Ø82.55x5, Ports 1/2-14NPTF | | | | | | | |
| | 750 | TD | 4-Ø13.5 Wheel Mount, Pilot Ø82.55x5, Ports G1/2 | | | | | | | |

Note: When the table is used, please fill the code of left rows in dash area and give us, which the code information is consists of construction, displacement, mounting flange, output shaft and ports. If the specification is not in the table or you have specific requirements, please contact us.

FPMER-2Motor: The dimensions 44.2 is replaced by 45.7 with shaft M1、T31、G32 of Ø38.1 shaft seal in flange w# and T#.

# FPMER-3 SHAFT EXTENSIONS DIMENSIONS DATA

Wheel Mount
Code: Port A、B
WS 7/8-14UNF
WP 1/2-14NPTF
WD G1/2

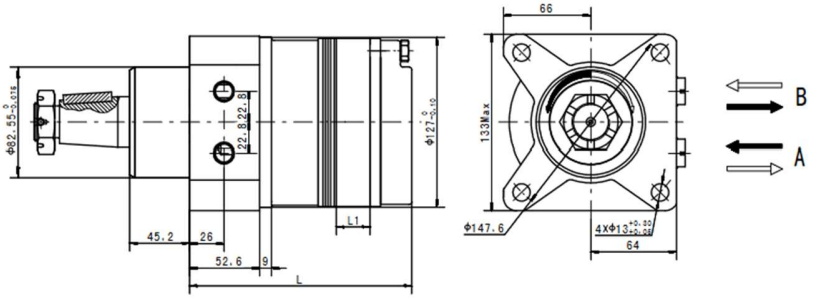


| Displacement (cm³/rev) | 125 | 160 | 200 | 230 | 250 | 300 | 350 | 375 | 400 | 475 | 540 | 650 | 750 |
|---|---|---|---|---|---|---|---|---|---|---|---|---|---|
| L1 (mm) | 10.2 | 13.5 | 17 | 19.5 | 22 | 25.4 | 29.5 | 31.8 | 35.5 | 39.4 | 47.3 | 57 | 63.5 |
| L (mm) | 153 | 156 | 159.5 | 162 | 164.5 | 168 | 172 | 174.5 | 178 | 182 | 190 | 199.5 | 206 |
| Weight (kg) | 13.2 | 13.5 | 13.8 | 14 | 14.2 | 14.5 | 14.9 | 15.2 | 15.5 | 15.7 | 16.5 | 17.3 | 17.8 |

Shaft M31

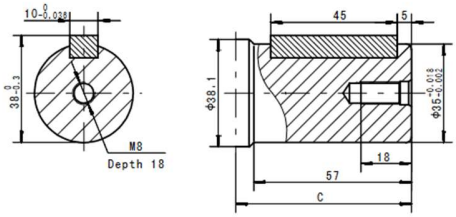


Shaft M31:Cylindrical shaft Ø35
Parallel key 10x8x45

Shaft T31

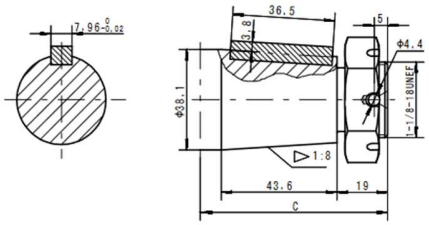


Shaft T31:Cone-shaft Ø38.1
Parallel key 7.96x7x36.5
Tightening torque:410~510Nm

Shaft G31

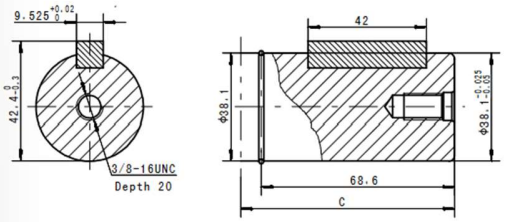


Shaft G31:Cylindrical shaft Ø38.1
Parallel key 9.525x9.525x42

| From Mounting Flange to Shaft End Dimension C | | |
|---|---|---|
| Shaft Code | Magneto Mount (mm) | Wheel Mount (mm) |
| M31 | _ | 105 |
| T31 | _ | 117 |
| G31 | _ | 119 |

## *FPMER-3 Series Hydraulic Motors*

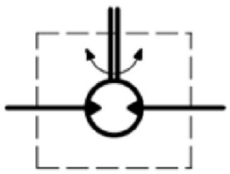

## *Direction of shaft rotation: Reverse timed*

When facing shaft end of motor, shaft to rotate:

- Clockwise when port “B" is pressurized.
- Counter-clockwise when port “A" is pressurized

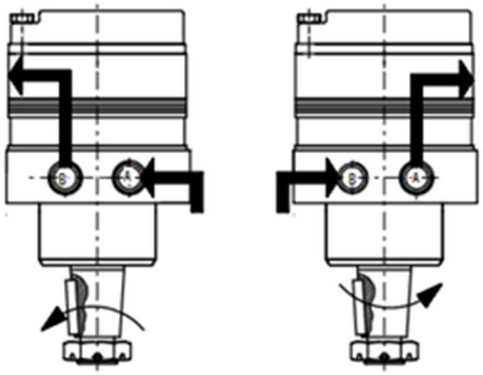


## *Axial and Radial Forces*

*FPMER-3 for #W mounting*

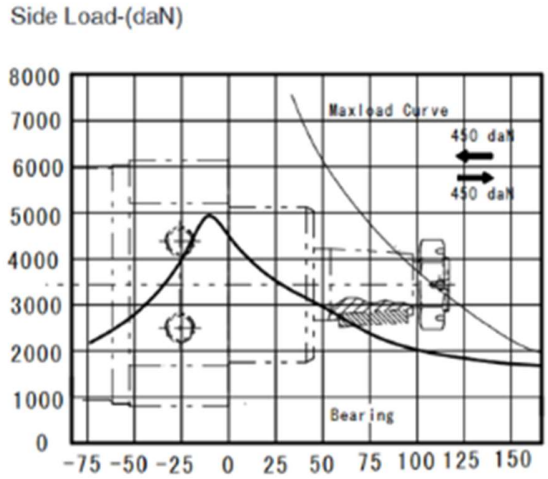

The bearing curve represents allowable bearing loads for an $L_{10}$ bearing life at $12x10^6$ revolutions. The maximum load curve is defined by bearing static load capacity. This curve should not be exceeded at any time including shock loads.

# Order *Information*

F 1 – 2 – 3 – 4 – 5 – 6 – 7

| Pos.1 | 2 | 3 | | | 4 | | | 5 | | 6 | | 7 | |
|---|---|---|---|---|---|---|---|---|---|---|---|---|---|
| Code | Disp. | Mount Flange, Pilot, Port | | | Output Shaft | | | Rotation direction | | Paint | | Unusually function | |
| | 125 | | | | | | | | | | | | |
| | 160 | | | | | | | | | | | | |
| | 200 | | | | | | | | | | | | |
| | 230 | WS | 4-013.5 Wheel Mount, Pilot Ø82.55, Ports 7/8-14 O-ring | | | | | | | | | | |
| | 250 | | | | | | | | | | | | |
| | 300 | WP | 4-013.5 Wheel Mount, Pilot Ø82.55, Ports 1/2-14NPTF | | M31 | Shaft035, Parallel key 10x8x45 | | | | | | | |
| 3 | 350 | | | | T31 | Cone-Shaft Ø38.1, Parallel key 7.96x7x36.5 | | None | Standard | 00 | No paint | None | Standard |
| | 375 | | | | G31 | Shaft Ø38.1 , parllel key 9.525x9.525x42 | | R | Reverse timed | None | Blue | | |
| | 400 | WD | 4-013.5 Wheel Mount, Pilot Ø82.55, Ports G1/2 | | | | | | | B | Black | | |
| | 475 | | | | | | | | | S | Silver Grey | | |
| | 540 | | | | | | | | | | | | |
| | 650 | | | | | | | | | | | | |
| | 750 | | | | | | | | | | | | |

Note: When the table is used, please fill the code of left rows in dash area and give us, which the code information is consists of construction,displacement, mounting flange, output shaft and ports. If the specification is not in the table or you have specific requirements, please contact us.

# *FPMER-4 DIMENSIONS MOUNTING DATA*

Wheel Mount
Code : Port A、B
WS 7/8-14UNF
WP 1/2-14NPTF
WD G1/2

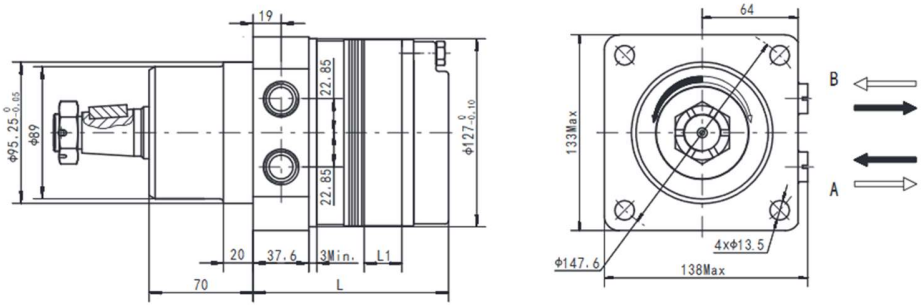


| *Displacement (cm³/rev)* | 125 | 160 | 200 | 230 | 250 | 300 | 350 | 375 | 400 | 475 | 540 | 650 | 750 |
|---|---|---|---|---|---|---|---|---|---|---|---|---|---|
| *L1 (mm)* | 10.2 | 13.5 | 17 | 19.5 | 22 | 25.4 | 29.5 | 31.8 | 35.5 | 39.4 | 47.3 | 57 | 63.5 |
| *L (mm)* | 119 | 122 | 125.5 | 128 | 130.5 | 134.5 | 138 | 140.5 | 144.5 | 148 | 156 | 165.5 | 172 |
| *Weight (kg)* | 12.8 | 13.1 | 13.4 | 13.6 | 13.8 | 14.1 | 14.5 | 14.8 | 15.2 | 15.6 | 16.1 | 16.9 | 17.4 |

# Shaft Extensions for FPMER-4 Motors

Shaft G2

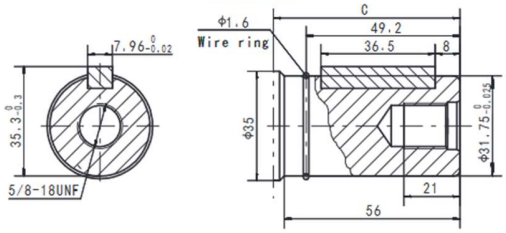


Shaft G2:Cylindrical shaft Ø31. 75
Parallel key 7x96x7x36x5

Shaft B1

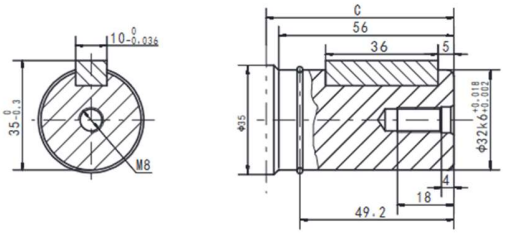


Shaft B1:Cylindrical shaft Ø32
Parallel key 10x8x36

Shaft FD1

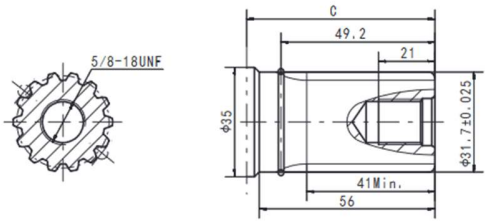


Shaft FD1:Splined 14-DP12/24
Flat root side fit
to fit ANSI B92.1 1996

Shaft T4

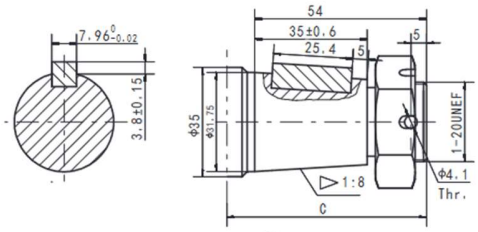


Shaft T4:Cone-shaft Ø31.75
Parallel key 7.96x7.96x25.4
Tightening torque:200±10Nm

Shaft RW

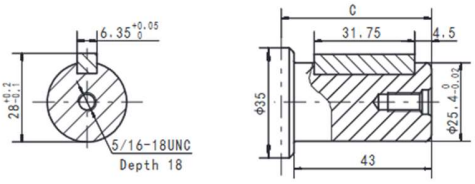


Shaft RW:Cylindrical shaft Ø25 4
Parallel key 6.35x6.35x31.75

Shaft SW

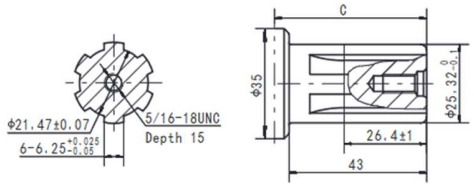


Shaft SW:Splined SAE 6B

Shaft AW

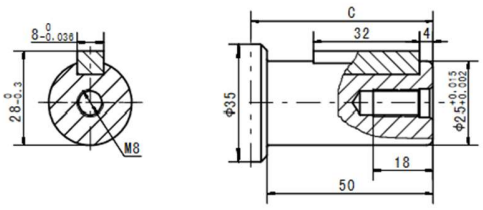


Shaft AW:Cylindrical shaft Ø25
Parallel key 8x7x32

| *From Mounting Flange to Shaft End* | |
|---|---|
| *Dimension C* | |
| *Shaft Code* | *Wheel Mount (mm)* |
| G2 | 131 |
| B1 | 130 |
| FD1 | 131 |
| T4 | 135 |
| RW | 119 |
| SW | 119 |
| AW | 125 |

## *FPMER-4 Series Hydraulic Motors*

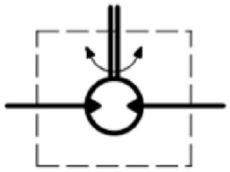

## *Direction of shaft rotation: Reverse timed*

When facing shaft end of motor,shaft to rotate:

- Clockwise when port “B" is pressurized.
- Counter-clockwise when port “A" is pressurized

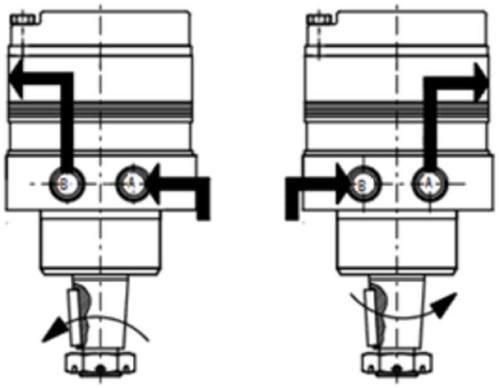


## *Axial and Radial Forces*

*FPMER-4 for #W mounting*

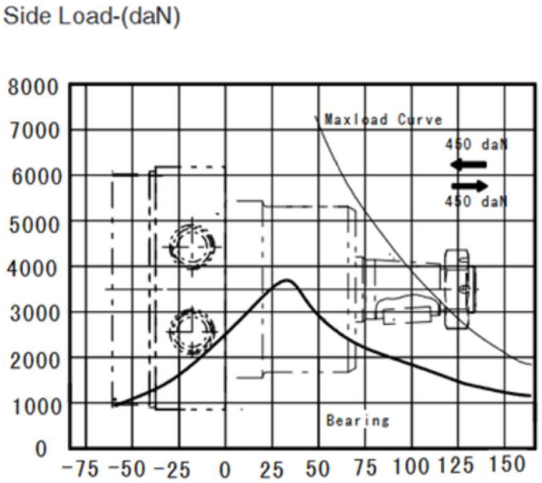

The bearing curve represents allowable bearing loads for an $L_{10}$ bearing life at $12x10^6$ revolutions. The maximum load curve is defined by bearing static load capacity. This curve should not be exceeded at any time including shock loads.

# Order *Information*

| 1 | 2 | 3 | | | 4 | | | 5 | | 6 | | 7 | |
|---|---|---|---|---|---|---|---|---|---|---|---|---|---|
| F | | | | | | | | | | | | | |
| Pos.1 | 2 | 3 | | | 4 | | | 5 | | 6 | | 7 | |
| Code | Disp. | Mount Flange, Pilot, Port | | | Output Shaft | | | Rotation direction | | Paint | | Unusually function | |
| 4 | 125<br>160<br>200<br>230<br>250<br>300<br>350<br>375<br>400<br>475<br>540<br>650<br>750 | WS | 4-Ø13.5 Wheel Mount, Pilot Ø82.55x5, Ports 7/8-14 O-ring | G2 | Shaft Ø31.75 , parllel key 7.96x7x36.5 | None | Standard | 00 | No paint | None | Standard |
| | | WP | 4-Ø13.5 Wheel Mount, Pilot Ø82.55x5, Ports 1/2-14NPTF | B1 | Shaft032, Parallel key 10x8x45 | R | Reverse timed | None | Blue | | |
| | | WD | 4-Ø13.5 Wheel Mount, Pilot Ø82.55x5, Ports G1/2 | FD1 | Shaft Ø31.75, splined key 14-DP12/24 | | | B | Black | | |
| | | | | T4 | Cone-Shaft Ø31.75, Parallel key 7.96x7.96x25.4 | | | S | Silver Grey | | |
| | | | | RW | Shaft Ø25.4 , parllel key 6.35x6.35x31.75 | | | | | | |
| | | | | SW | Shaft Ø25.4 ,splined key SAE 6B | | | | | | |
| | | | | AW | Shaft Ø25 , parllel key 8x7x32 | | | | | | |

Note: When the table is used, please fill the code of left rows in dash area and give us, which the code information is consists of construction, displacement, mounting flange, output shaft and ports. If the specification is not in the table or you have specific requirements, please contact us.

# FPK10 Series Static Wet Hydraulic Brake

FPK10 series static wet hydraulic brake is suitable for lower speed application of scissors type aerial work platform and agricultural machinery and others with wheel mounting. The feature:

- The output shaft adopts the same heavy duty roller bearing in front and behind, which is bigger ability on radial load.
- It adopts optimized disc brake piece and spring load, for reliable braking and good endurance.
- Optimizing piston and loading mechanism, to provide the minimum dimension of wheel connection method.
- With double braking release port, in order to discharge the braking cylinder gas or external brake fluid.
- Big braking torque, suitable for static braking.

## *Main Specification*

| *Item* | *FPK10-1* | *FPK10-2* |
|---|---|---|
| *Min. Static Torque [Nm]* | 1150 | 1700 |
| *Release Pressure [MPa]* | 2.8 | |
| *Max. Release Pressure [MPa]* | 21 | |
| *Max. Speed [rpm]* | 300 | |
| *Release Volume [cm³]* | 12 | |
| *Oil Volume [cm $^3$]* | 100~120 | |
| *Max. Pressure of Lubrication oil port [MPa]* | 0.05 | |
| *Weight [kg]* | 18 | 20 |

## *Hydraulic systems*

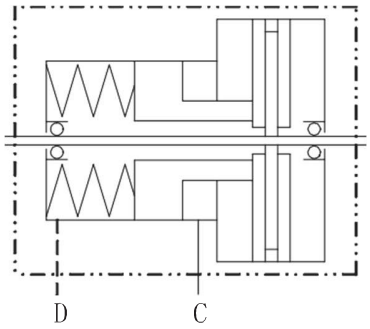


## *FPK10-1 - DIMENSIONS AND MOUNTING DATA*

S1 Flange and Pilot and Brake Pors

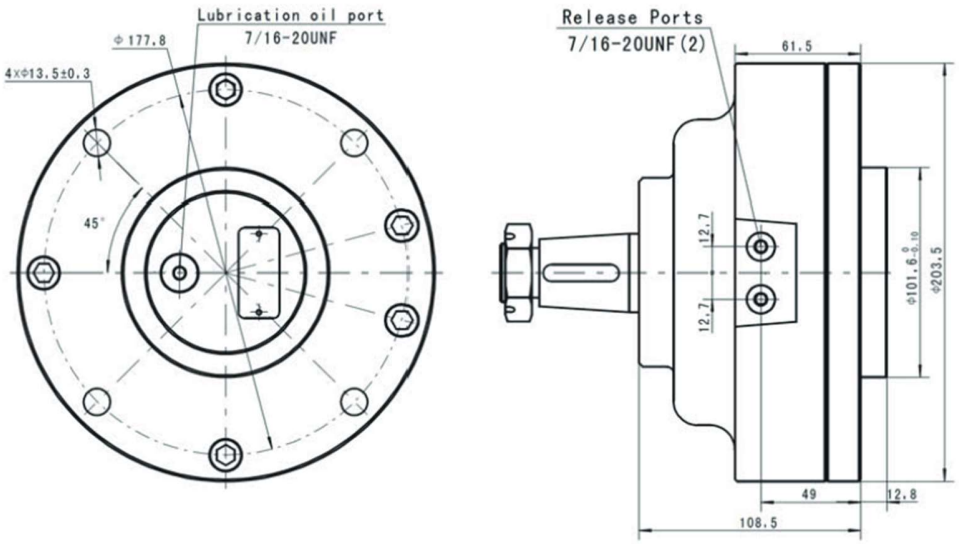

## FPK10-1 - DIMENSIONS OF SHAFT EXTENTSIONS

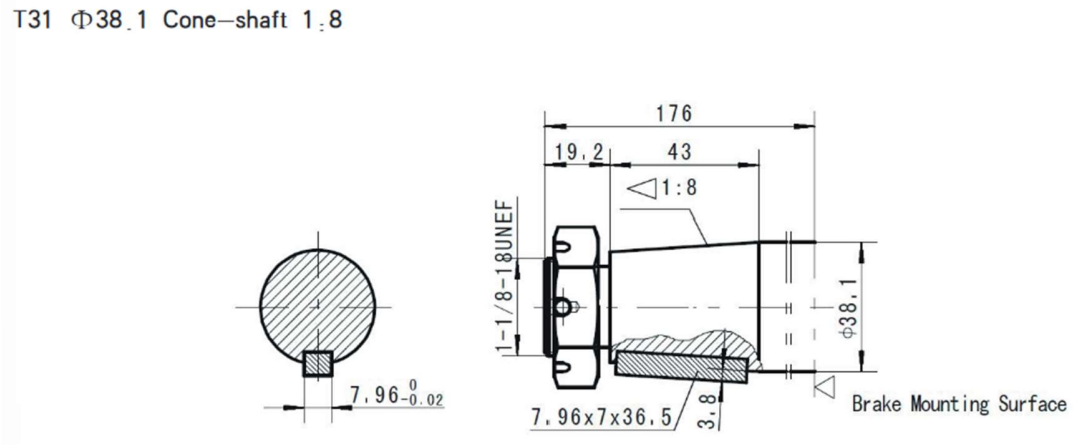


## FPK10-1 - Mounting Flange Radial Forces

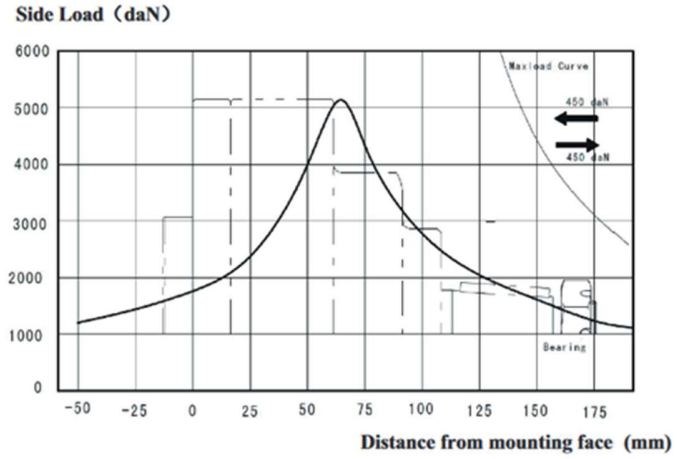


The bearing curve represents allowable bearing loads for an $L_{10}$ bearing life at $12x10^6$ revolutions. The maximum load curve is defined by bearing static load capacity. This curve should not be exceeded at any time including shock loads.

# Order *Information*

FPK10- 1 – 2 – 3 – 4 – 5 – 6 – 7 – 8

| Pos.1 | 2 | 3 | | | 4 | | 5 | | 6 | | 7 | | 8 | |
|---|---|---|---|---|---|---|---|---|---|---|---|---|---|---|
| Code | Brake Torque | Output shaft | | | Flange and Pilot and Brake Pors | | Lubrication Port | | Paint | | Design Code | | Nut Code | |
| 1 | 1150 | T31 | Ø38.1 Cone-Shaft 1:8. Parallel key 7.96x7x36.5 | S1 | Round Flange 4x Ø13.5, Ø177.8,Pilot Ø101.6x12.8, Brake Pors 7/16-20UNF | Omit | 7/16-20UNF | B<br>S<br>00<br>Omit | Black<br>Sliver Grey<br>No paint<br>Blue | 02 | 002 | N | N-Type thick Nut | |

Note: When the table is used, please fill the code of left rows in dash area and give us, which the code information is consists of construction, output shaft, Flange and Pilot and Brake Ports, Lubrication Port etc.. If the specification is not in the table or you have specific requirements, please contact us.

# FPK10-2 - DIMENSIONS AND MOUNTING DATA

S1 Flange and Pilot and Brake Pors

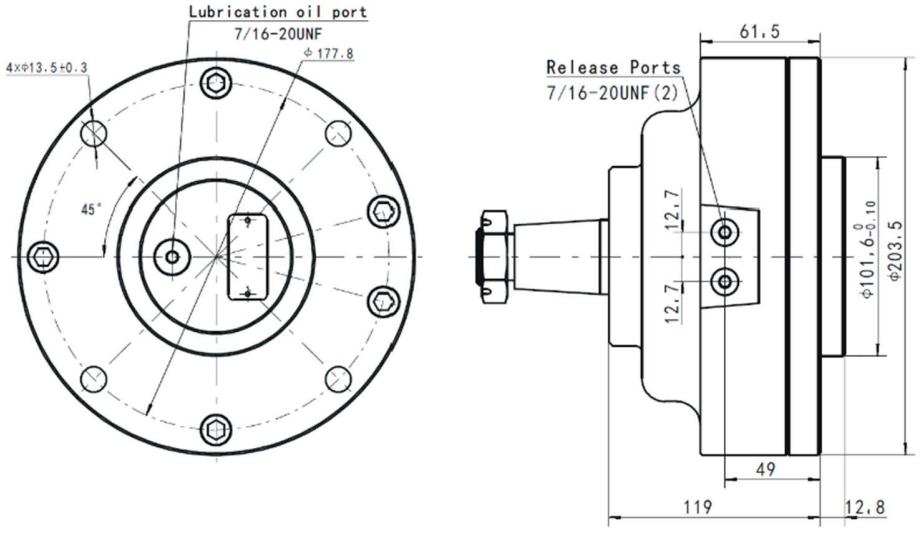


# FPK10-2 - DIMENSIONS OF SHAFT EXTENTSIONS

T31 Φ38.1 Cone—shaft 1:8

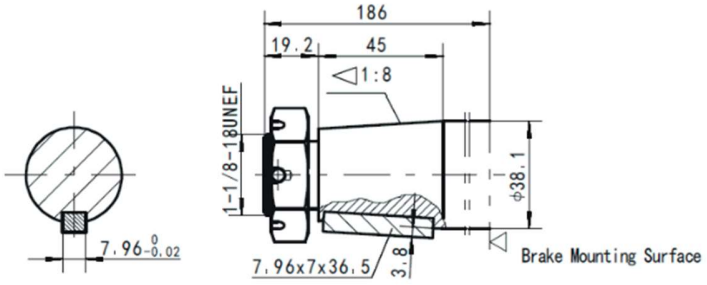

## *FPK10-2 - Mounting Flange Radial Forces*

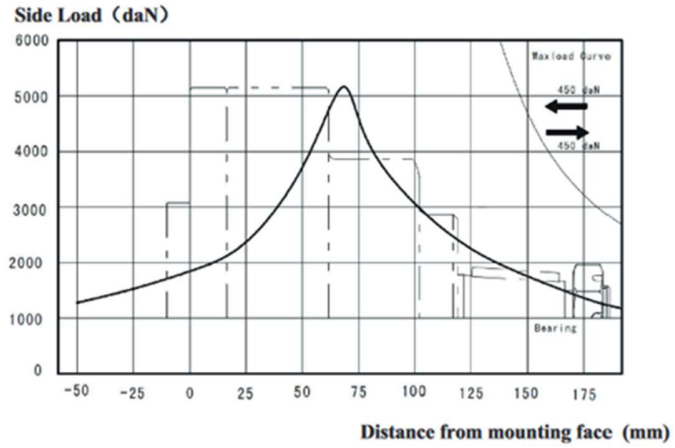


The bearing curve represents allowable bearing loads for an $L_{10}$ bearing life at $12x10^6$ revolutions. The maximum load curve is defined by bearing static load capacity. This curve should not be exceeded at any time including shock loads.

# Order *Information*

FPK10- 1 – 2 – 3 – 4 – 5 – 6 – 7 – 8

| Pos.1 | 2 | 3 | | | 4 | | 5 | | 6 | | 7 | | 8 | |
|---|---|---|---|---|---|---|---|---|---|---|---|---|---|---|
| Code | Brake Torque | Output shaft | | | Flange and Pilot and Brake Pors | | Lubrication Port | | Paint | | Design Code | | Nut Code | |
| 1 | 1150 | T31 | Ø38.1 Cone-Shaft 1:8. Parallel key 7.96x7x36.5 | S1 | Round Flange 4x Ø13.5, Ø177.8,Pilot Ø101.6x12.8, Brake Pors 7/16-20UNF | Omit | 7/16-20UNF | B<br>S<br>00<br>Omit | Black<br>Sliver Grey<br>No paint<br>Blue | 02 | 002 | N | N-Type thick Nut | |

Note: When the table is used, please fill the code of left rows in dash area and give us, which the code information is consists of construction, output shaft, Flange and Pilot and Brake Ports, Lubrication Port etc.. If the specification is not in the table or you have specific requirements, please contact us.

# FPK2 SERIES HYDRAULIC BRAKE

## *Introduction*

FPK2 series brake is one kind of hydraulic wet disc brake. The brake force is caused by the spring, and hydraulic pressure releases the brake force.
Features as follows:

- FPK2 series adopts the special friction disc and high strength spring design: long life endurance, low noise, high braking reliability.
- with 4 Drain port design, the brake can be used in different applications.
- compact structure, easy mounting.
- it can be used preferentially together with FPMP, FPMR, FPMS series hydraulic motor.

## *Application*

FPK2 series hydraulic brake stays in braking condition since delivery out of the factory. During normal operation, there exists the braking force in the brake disc, only if the pressure of hydraulic system, that the brake links , is lower than the pressure required by the release of brake, the spring force shall keep the brake in braking condition.
FPK2 series hydraulic brake is widely used in heavy duty machinery, such as engineering machinery, cranes, off-highway machinery vehicles, construction machinery, material handling machinery, agricultural machinery, mining, sanitation machinery, timber industries. They are also used in winches and in hydrostatic drive systems for automatization engines.
Special Note: such kind of brake is only used in static parking brake. Dynamic braking is not recommended.

## *Intruction Manual*

In order to make the FPK2 series brake work under the best situation, we recommend the normal requirements as follows:

1. Assembly: 1st of all , we have to mount the brake FPK2 with hydraulic motor, and then fill the brake with lubrication oil through the drain port,

and then mount with other parts.

2. Fluid type: Mineral based-HM(GB/T763.2-87) (ISO6743/4) or HLP(DIN51524).
3. Temperature range: normal -20°C-90°C the best optimal situation 20°C-60°C
4. Viscosity range: 20～75mm²/s; the best optimal situation 42～74mm²/s at 40°C
5. Filtration: nominal filtration of 25 micron, ISO code 20/16.
6. Maintenance: changed after the first 50～100h, then after every 500～1000h

## *Typical Applications Drawing*

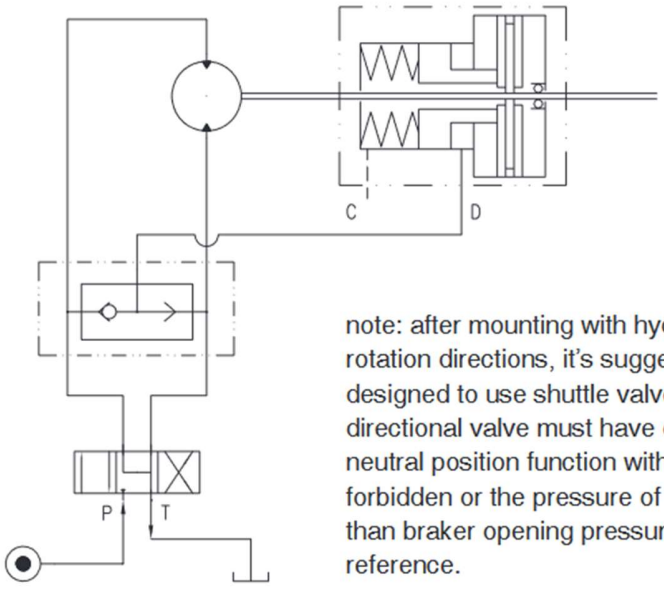


note: after mounting with hydraulic motor, if the motor needs both rotation directions, it's suggested that the hydraulic system is designed to use shuttle valve, and the neutral position of the directional valve must have off-load function(type Y or H), the neutral position function without off-load function (type O) is forbidden or the pressure of the outlet port in the system is larger than braker opening pressure. Please check the drawing for reference.

## Specification Data

| Item | FPK2-1 | |
|---|---|---|
| Min. static Torque [Nm] | 200 230 | 410 450 |
| Min. Opening Pressure [MPa] | 1.7 | 2.3 |
| Max. Opening Pressure [MPa] | 30 | |
| Min.oil quantity for brake releasing[cm³] | 7 | 8 |
| Oil volume [cm³] | 50 | 120 |
| Max. pressure in drain space [MPa] | 0.05 | |
| Weight [kg] | 9 | |

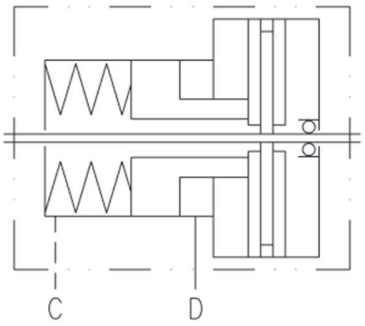


*Static torque is obtained at working pressure 0 MPa

## Load Curve

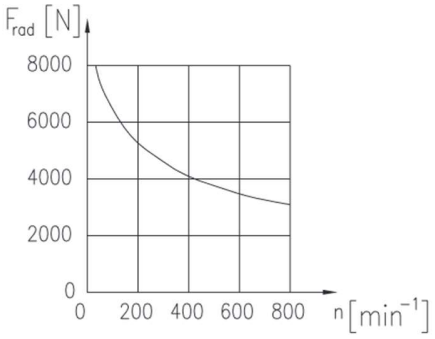


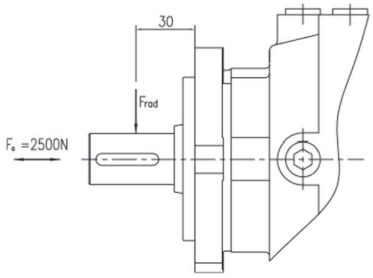

# Mounting Data

*Model FPK2-1*

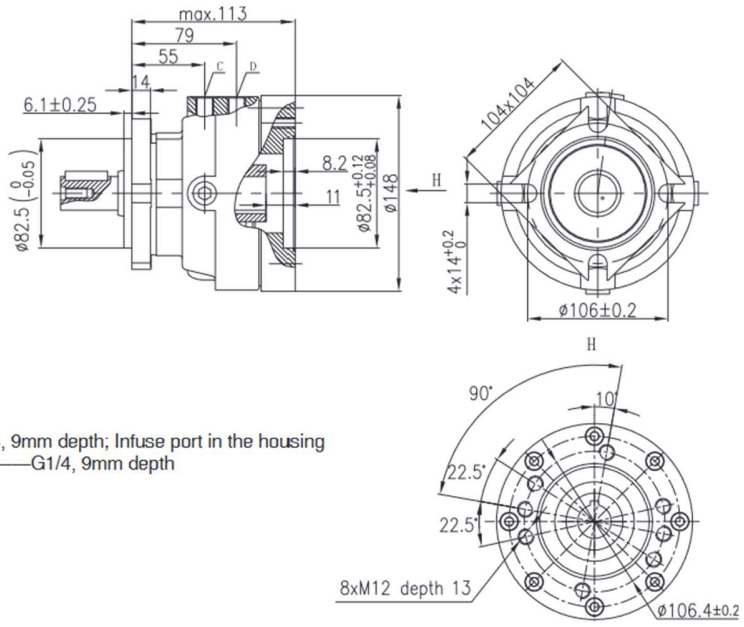


C Drain port——G1/4, 9mm depth; Infuse port in the housing
D Brake release port——G1/4, 9mm depth

# INPUT & OUTPUT SHAFT DATA

## INPUT SHAFT HOLES

A

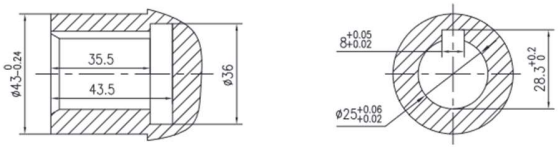


B

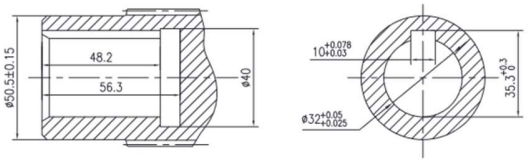


C

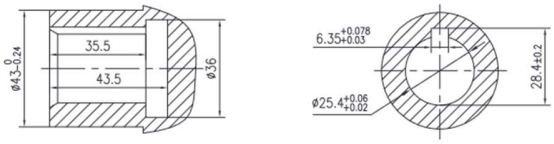


E

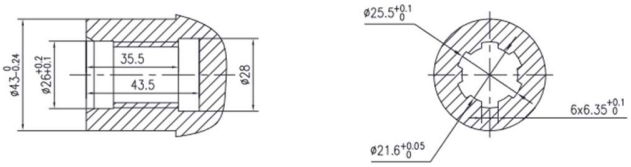


G

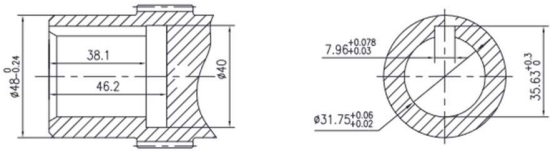


N

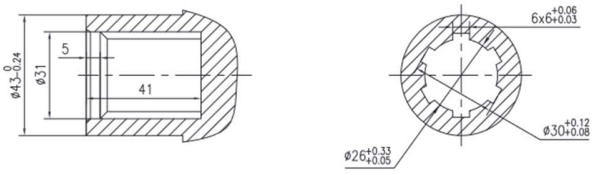

# OUTPUT SHAFT EXTENSIONS

A

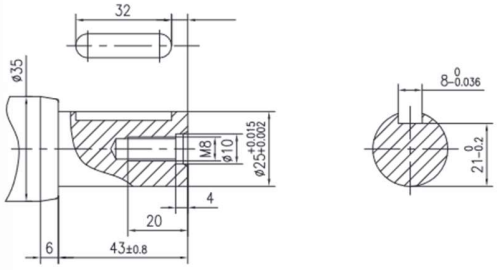


B

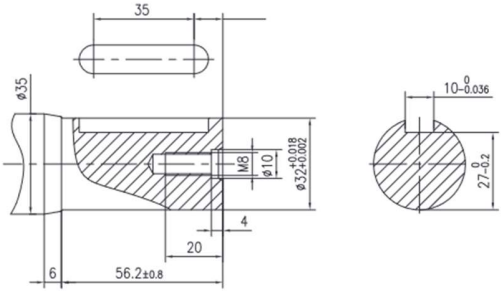


C

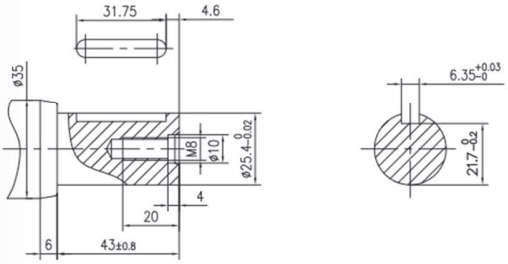


E

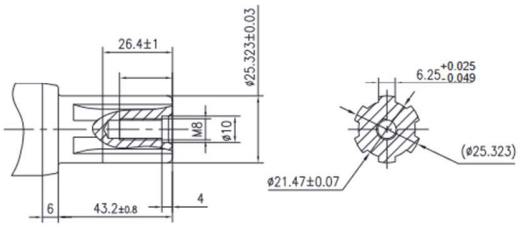


G

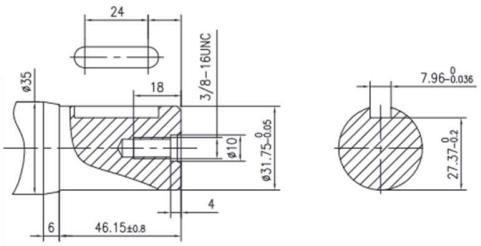


N

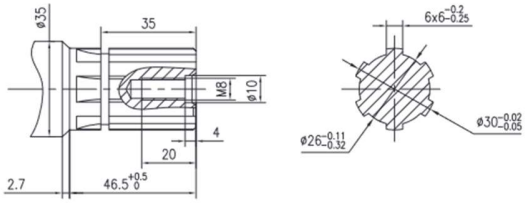

# Order *Information*

| | 1 | 2 | 3 | | 4 | | 5 | | 6 | | 7 |
|---|---|---|---|---|---|---|---|---|---|---|---|
| | FPK | | | | | | | | | | |
| Pos.1 | | 2 | 3 | | 4 | | 5 | | 6 | | 7 |
| Series Code | | Structure Code | Torque | | Input Shaft holes | | Output Shaft extensions | | Paint | | Unusually function |
| 2 | | 1 | Torque200--230Nm | 210 | Shaft holes Φ25, Parallel key 8x7x32 | A | Shaft Φ25, Parallel key 8x7x32 | A | No Paint | 00 | Standard omit |
| | | | | | Shaft holes Φ32, Parallel key 10x8x45 | B | Shaft Φ32, Parallel key 10x8x45 | B | Blue | omit | |
| | | | | | Shaft holes Φ25.4, Parallel key 6.35x6.35x31.75 | C | Shaft Φ25.4, Parallel Key6.35x6.35x31.75 | C | Black | B | |
| | | | Torque410--450Nm | 430 | Shaft holes Φ25.4, splined key SAE 6B | E | Shaft Φ25.4, splined key SAE 6B | E | Sliver | S | |
| | | | | | Shaft holes Φ31.75, Parallel key 7.96x7.96x31.75 | G | Shaft Φ31.75, Parallel Key7.96x7.96x31.75 | G | Grey | | |

Note: When the table is used, pls fill the code with right rows in the table and give us, which the code information is consist of construction, torque, input Shaft holes, output Shaft extensions, Paint .If the specification is not in the table or you have specific requirements, please contact us.

# WGB SERIES PLANETARY GEARBOX

## *Introduction*

WGB Series planetary gearbox is used in tracklayers , wheel driving vehicles , different kinds of self-mobile machineries, and such kind of transmission & lifting machinery as winches, cylinder machinery , etc. By adopting special orbital motor and compact structure design, the planetary gearbox can be installed inside the wide groove of the pedrail or wheel, or inside the drum of the winches or the cylinder machinery; the design is simple with reasonable space, and easy mounting. WGB Series planetary gearbox is suitable for open and close hydraulic loop system. WGB Series planetary gearbox is widely used in self-mobile equipment, such as engineering machinery, lifting machinery, road machinery vehicles, construction machinery, convey machinery, agricultural machinery, mine machinery, sweeping & cleaning machinery, wood machinery, etc., it's also used in winches, and automatization engine's static hydraulic driving system. The features are shown as follows:

- Adopt special sealing system. Special design of composite sealing, being used in the radial and axial sealing in & between rotating and fixed parts;
- Adopt built-in multi-disk parking brake system which is also the spring-load parking brake, hydraulic pressure releases brake force; on the condition that the pressure of hydraulic system decreases lower than the required pressure of the release brake, it will safely stop rotation completely.
- Compact structure, easy mounting.
- To be pre-emptively used together with FPMR, FPMS series hydraulic orbital motors.

## *Instruction Manual*

In order to keep the hydraulic system operating under optimal condition, the normal requirements are shown as follows:

1. Hydraulic oil: HM mineral oil (ISO 6743/4)(GB/T763.2-87) or HLP mineral oil(DIN 51524).
2. Oil temperature: normal operation temperature: -20°C~90°C; optimal

temperature scope: 20°C~60°C;

3. Oil viscosity: 20~75mm²/s; optimal viscosity scope: 42~74mm²/s at the temperature of 40°C;
4. Oil cleanness: oil filtration precision: 25μm; solid contamination level has to be lower than 20/16;

In order to keep the planetary gearbox operating under the best condition, the normal requirements are shown as follows:

1. Lubrication oil: CKC220 mineral gear oil(ISO 12925-1)(GB/T5903);
2. Oil viscosity: 220mm²/s at the temperature of 40°C;
3. Maintenance period: 1st maintenance should be carried out 50-200 hours after initial operation; afterwards normal maintenance should be carried out every 500~1000 hours.
4. We suggest that MOBIL GEAR630, ESSO SPARTAN EP220, SHELL OMALA EP220 be used.

## *How to change the oil for planetary gearbox:*

No lubricate oil in the gearbox lubricate the gearbox before it be used.

1. As shown in Drawing A, dismantle two port plugs, discharge the lubrication oil out of the planetary gearbox. and then clean the planetary housing with the detergent supplied by lubrication oil supplier.
2. As shown in Drawing B, fill more hydraulic oil. More oil till lubrication oil flows out of the drain port; fasten two plugs till the ports are sealed.

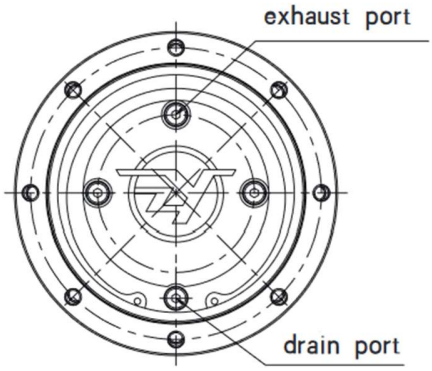


Drawing A

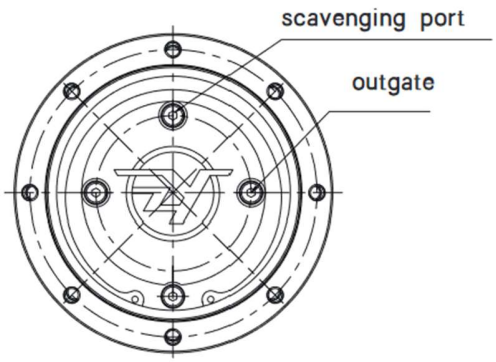


Drawing B

## *Main mounting data and dimensions*

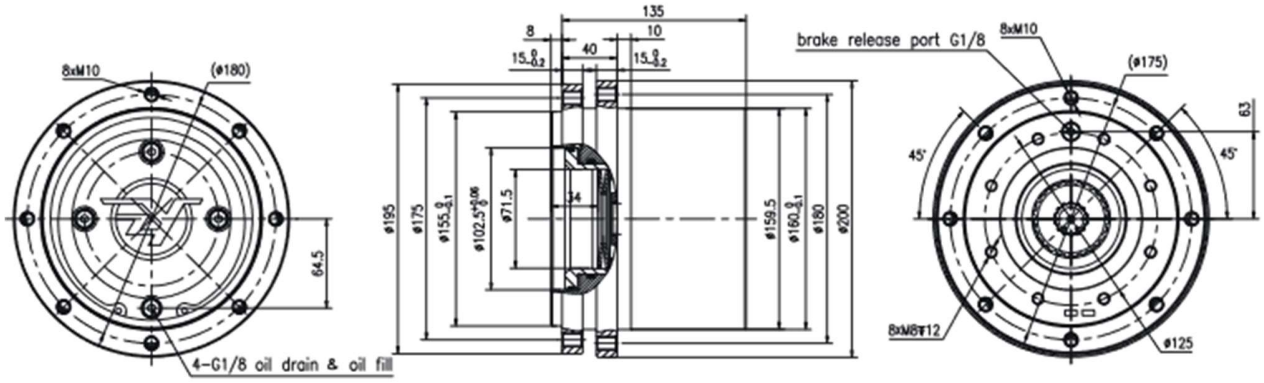


*WGB150A Series*

WGB150 Series standard motor FPMSY125, main specifications of the non-standard motor with WGB150 will be calculated upon hydraulic motor. The main technical planetary gearbox needs to be calculated according to the hydraulic motor and gearbox gear reduction ratio of performance parameters. The max. output torque of WGB 150 is 1500 Nm, the max. output power is 14 kW. The rotation direction of input and output of WGB 150 planetary gearbox is reverse. The main technical planetary gearbox needs to be calculated according to the hydraulic motor and gearbox gear reduction ratio of performance parameters.

# *Main mounting and dimensions of motor for WGB150A*

FPMSY-IT Series（Inside brake oil runner)

| *Model* | *L* | *L1* | *L2* |
|---|---|---|---|
| FPMSY-IT-80 | 137 | 16 | 74.5 |
| FPMSY-IT-100 | 141 | 20 | 78 |
| FPMSY-IT-125 | 146 | 25 | 82.5 |
| FPMSY-IT-160 | 148 | 27 | 87.5 |
| FPMSY-IT-200 | 155 | 34 | 94.5 |
| FPMSY-IT-250 | 163 | 42 | 102.5 |
| FPMSY-IT-315 | 175 | 54 | 114.5 |
| FPMSY-IT-400 | 190 | 69 | 129.5 |
| FPMSY-IT-475 | 204 | 83 | 143.5 |

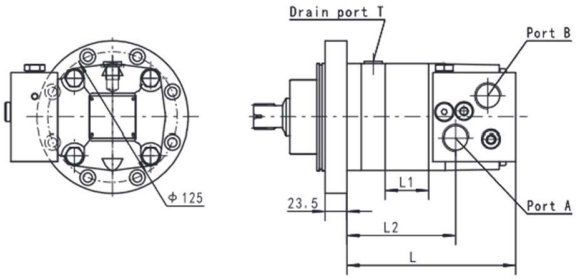


FPMSY-WT Series（Outboard brake oil runner)

| Model | L | L1 | L2 |
|---|---|---|---|
| FPMSY-WT-80 | 127 | 16 | 81.5 |
| FPMSY-WT-100 | 131 | 20 | 85 |
| FPMSY-WT-125 | 136 | 25 | 89.5 |
| FPMSY-WT-160 | 138 | 27 | 94.5 |
| FPMSY-WT-200 | 145 | 34 | 101.5 |
| FPMSY-WT-250 | 153 | 42 | 109.5 |
| FPMSY-WT-315 | 165 | 54 | 121.5 |
| FPMSY-WT-400 | 180 | 69 | 136.5 |
| FPMSY-WT-475 | 194 | 83 | 150.5 |

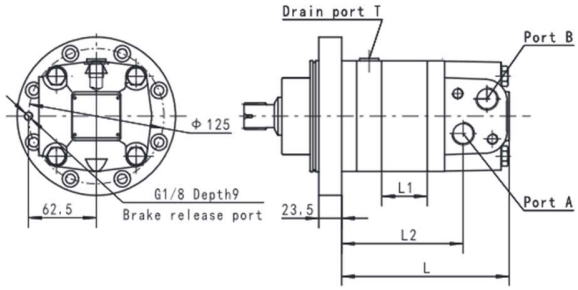

# Order *Information*

WGB 1 – 2 – 3 – 4 – 5 – 6

| Pos.1 | 2 | 3 | | 4 | | 5 | | 6 |
|---|---|---|---|---|---|---|---|---|
| Series code | Ratio | Brake code | | Flange code | | Painted | | Unusually function |
| 1500Nm | 3.28 | With Brake | BK | Standard | Omit | No Painted | 00 | Standard |
| 150A | 4.6 | | | | | Blue | Omit | Omit |
| | 5.75 | No Brake | Omit | | | Black | B | |
| | | | | | | Silver grey | S | |

Note: from the order code , please choose the colorful code in the right column, and provide us with the information in regard to series, ratio ,brake structure, and the paint etc. When selecting brakes, brake parameters: brake release pressure is 1.7 ~ 2.2MPa, brake release port for the G1 / 8, the brake release port maximum pressure 25MPa, the maximum braking torque of 400Nm.
If the specification is not in the table or you have special requirements, please contact us.

## Order information (FPMSY-WT, FPMSY-IT)

1 – 2 – 3 – 4 – 5 – 6

| Pos.1 | 1 | 2 | | | 3 | | 4 | | 5 |
|---|---|---|---|---|---|---|---|---|---|
| Order information | Motor displacement | Port and drain port | | | Rotation direction | | Painted | | Unusually function |
| FPMSY-WT | 80 | D | G1/2 manifold 2-M10, G1/4 | Omit | Standard | | No Painted | Omit | Standard |
| | 100 | M | M22×1.5 manifold 2-M10, M14×1.5 | | | | Blue | | |
| | 125 | S | 7/8-14UNF O-ring manifold 2-3/8-16, 7/16-20UNF | | | | Black | | |
| | 160 | P | 1/2-14NPTF manifold 2-3/8-16UNC, 7/16-20UNF | R | Opposite | | Silver grey | | |
| | 200 | | | | | | | | |
| | 250 | MC-FSSY-D | G1/2,G1/4 | | | | | | |
| | 315 | | | | | | | | |
| FPMSY-IT | 400 | MC-FSSY-M | M22×1.5,M14×1.5 | | | | | | |
| | 475 | MC-FSSY-S | 7/8-14UNF,7/16-20UNF | | | | | | |
| | | MC-FSSY-P | 1/2-14NPTF,7/16-20UNF | | | | | | |

Note: Motor of gearbox performance parameters are the same with the catalogue of FPMS/FPMSY
Users in the use of the ordering information, the motor structure, displacement, out of port and other information, select the left pornographic site code can be written to us by the above format.
If the selected size is not in the above table or special requirements, please contact us.
When selecting a motor, for built-in brake balance valve ports and features, please technical communication.

# HGB SERIES PLANETARY GEARBOX

## Introduction

HGB series planetary gearbox is one speed reducer for various machinery, adopting the compact design of combining hydraulic orbital motor and speed reducer, design structure is simple, with reasonable mounting space, easy for mounting. This kind of gearbox fits all kinds of hydraulic loop system. HGB series planetary gearbox is widely used various machinery, such as engineering machinery, lifting machinery, road machinery vehicles, construction machinery, convey machinery, agricultural machinery, mine machinery, sweeping & cleaning machinery, wood machinery, etc., it's also used in winches, and automatization engine's static hydraulic driving system. The features are shown as follows:

- Compact structure, easy mounting.
- Small volume, strong power.
- To be preemptively used together with FPMR,FPMH, FPMS series hydraulic orbital motors.

## Instruction Manual

In order to keep the hydraulic system operating under optimal condition, the normal requirements are shown as follows:

1. Hydraulic oil: HM mineral oil (ISO 6743/4)(GB/T763.2-87) or HLP mineral oil(DIN 51524).
2. 2.Oil temperature: normal operation temperature: -20℃~90℃; optimal temperature scope: 20℃~60℃;
3. Oil viscosity: 20~75mm²/s;optimal viscosity scope : 42~74mm²/s at the temperature of 40℃;
4. Oil cleanness: oil filtration precision: 25μm; solid contamination level has to be lower than 20/16;

In order to keep the planetary gearbox operating under the best condition, the normal requirements are shown as follows:

1. Lubrication oil: CKC220 mineral gear oil(ISO 12925-1)(GB/T5903);
2. Oil viscosity: 220mm²/s at the temperature of 40℃;
3. Maintenance period: 1st maintenance should be carried out 50-200 hours after initial operation; afterwards normal maintenance should be

carried out every 500~1000 hours.

4. We suggest that MOBIL GEAR630, ESSO SPARTAN EP220, SHELL OMALA EP220 be used.

## How to change the oil for planetary gearbox

No lubricate oil in the gearbox lubricate the gearbox before it be used.

1. As shown in Drawing A, dismantle two port plugs, discharge the lubrication oil out of the planetary gearbox. and then clean the planetary housing with the detergent supplied by lubrication oil supplier.
2. As shown in the Drawing, fill more hydraulic oil till lubrication oil flows out of the drain port; fasten two plugs till the ports are sealed

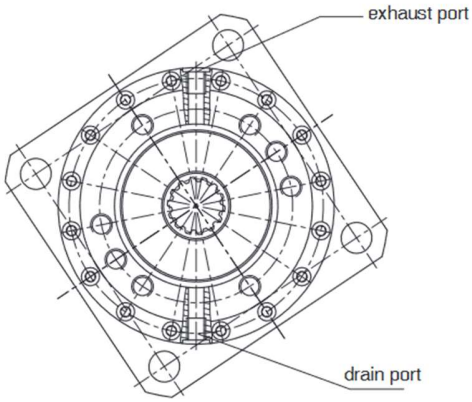


Drawing A

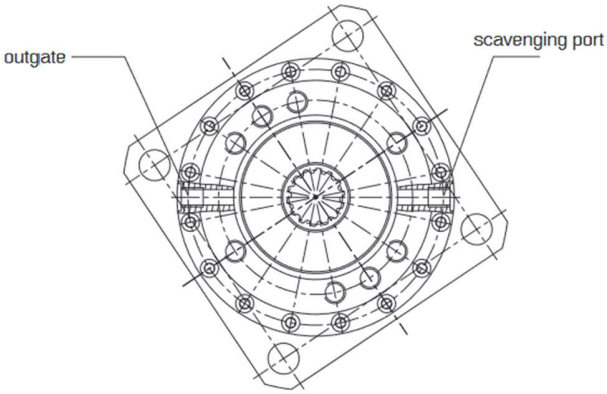


Drawing B

## Main mounting and specification data

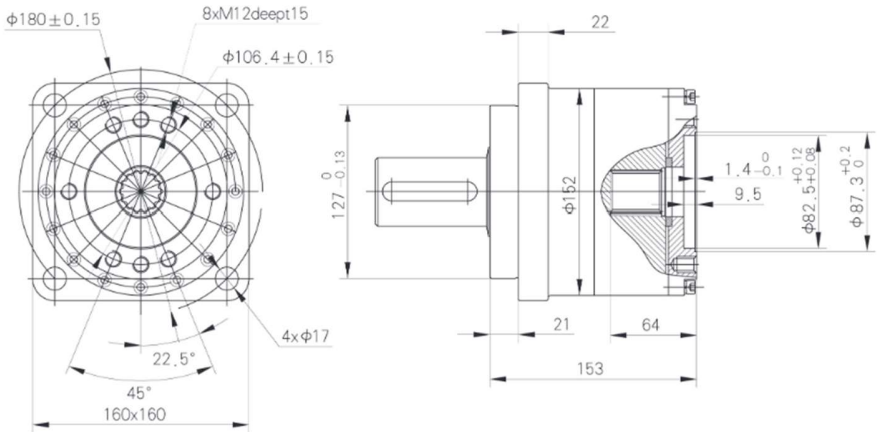

## Input hole

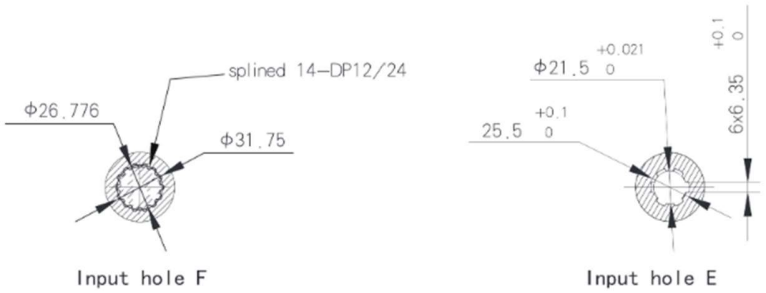


Input hole F　　Input hole E

## Output shaft extensions

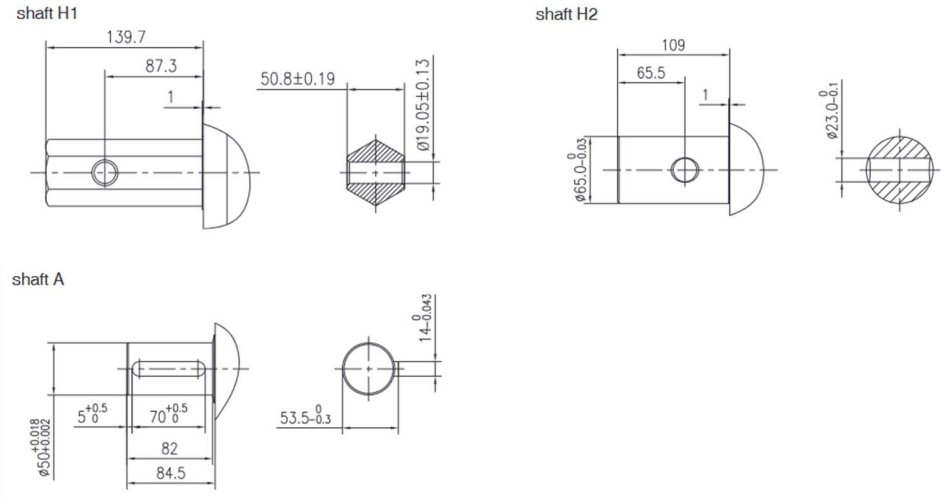


Main specifications of the FPMP, FPMR, FPMH and FPMSY motor with HGB will be calculated upon hydraulic motor. The rotation direction of input and output of HGB planetary gearbox is the same. The speed reduction radio is 3.65. The max. output torque of HGB is 2500Nm, the max. output power is 15kW.

# Order *Information*

| | 1 | 2 | 3 | 4 | 5 | 6 |
|---|---|---|---|---|---|---|
| HGB | | | | | | |

| Pos.1 | 2 | 3 | | 4 | | 5 | | 6 |
|---|---|---|---|---|---|---|---|---|
| Series Code | Ratio Code | Input hole code | | Output Shaft code | | Paint | | Unusually Function |
| Omit | 3.65 | SAE 6B splined hole | E | Hexangular 50 | H1 | No paint<br>Bule<br>Black<br>Silver gray | 00<br>None<br>B<br>S | Standard<br>None |
| | | | | Φ65 | H2 | | | |
| | | 14-DP12/24 splined hole | F | Φ50 | A | | | |

Note: From the order code, please choose the colorful code in the right column,and provide us with the information in regard to ratio,output torque ,input hole output shaft ,motor code ,etc. If the specification is not in the table or you have specific requirements, please contract us.

# CROSSOVER RELIEF VALVE

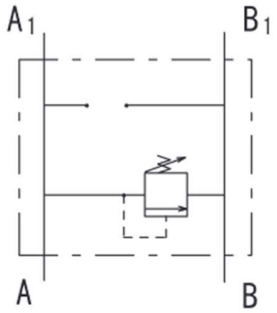


siglgle crossover relief valve type FY*A

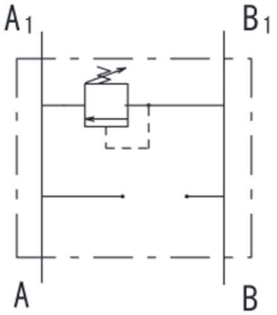


siglgle crossover relief valve type FY*B

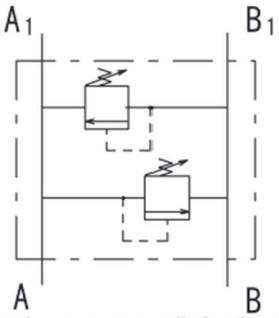


dual crossover relief valve type FY*D

## *Specification data*

| *Parameters* | Type | | | | |
|---|---|---|---|---|---|
| | FYRHD | FYSHD | FYSD | FYRH | FYSH |
| *Flow Rate (L/min)* | 60 | | | | |
| *Pressure Range (MPa)* | [3-10]; [8-21] | | | | |
| *Weight (kg)* | 1.7 | 1.8 | 1.8 | 1.55 | 1.65 |

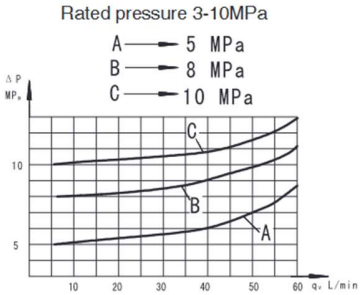


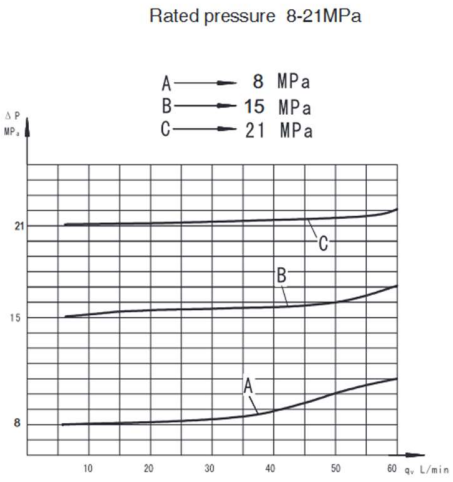

# CROSSOVER RELIEF VALVES FOR FPMR SERIES HYDRAULIC MOTORS

Dual crossover relief valve type FYRHD

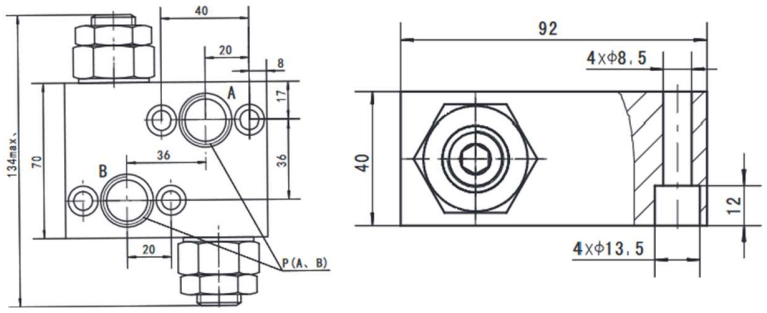


| Code | P(A、B)(depth) |
|---|---|
| D | G1/2(18) |
| M | M22×1.5(18) |
| S | 7/8-14UNF(18) |
| P | 1/2-14NPTF(18) |

Note:FYRHD Blocks are installed directly on BMR and BMP Motors with four bolts 5/16-18UNC,40mm long or M8×40-8.8,DIN912.

# CROSSOVER RELIEF VALVES FOR FPMS SERIES HYDRAULIC MOTORS

Dual crossover relief valve type FYSD

Dual crossover relief valve type FYSHD

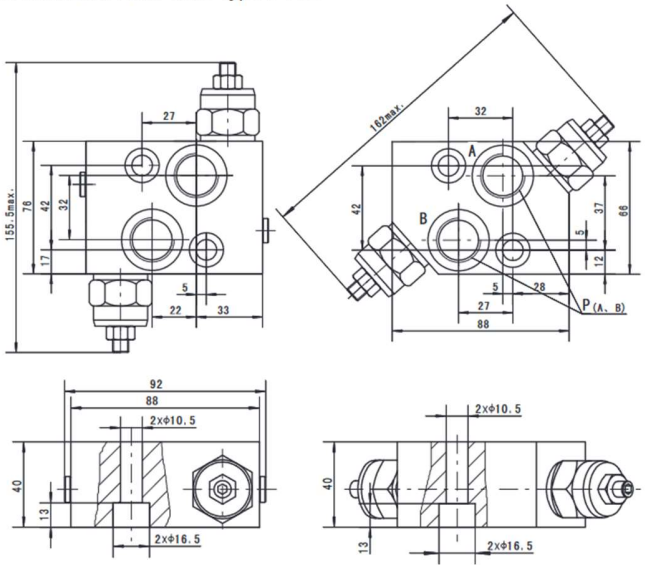


| Code | P(A、B)(depth) |
|---|---|
| D | G1/2(18) |
| M | M22×1.5(18) |
| S | 7/8-14UNF(18) |

Note:FYSHD Blocks are installed directly on BMS Motors with two bolts 3/8-16UNC,40mm long or M10×40-8.8,DIN912.

# SWITCH VALVE

Specification Data

| Parameters | Type | |
|---|---|---|
| | FSR | FSS |
| FlowRate (L/min) | 60 | |
| RatedPressure (MPa) | 25 | |
| Weight (Kg) | 0.9 | 0.7 |

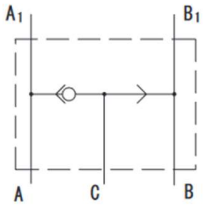


Switch valve FSR

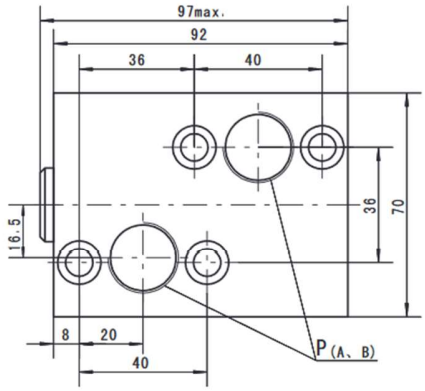


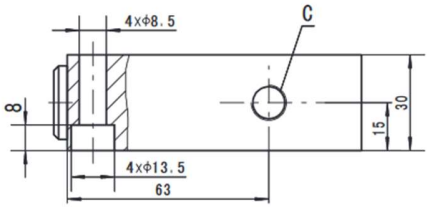


Switch valve FSS

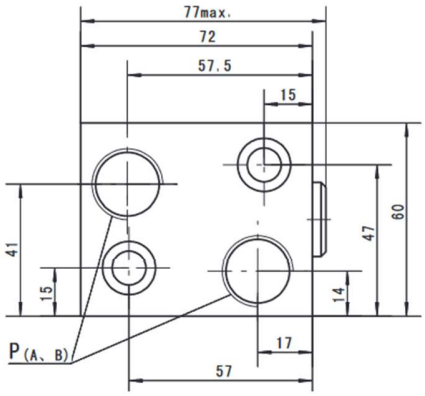


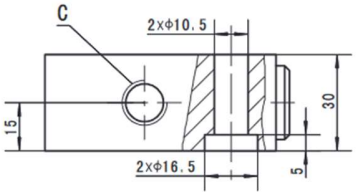


| Code | P(A、B)(depth) | C(depth) |
|---|---|---|
| D | G1/2(17) | G1/4(14) |
| M | M22×1.5(17) | M14×1.5(14) |
| S | 7/8-14UNF(17) | 7/16-20UNF(12.7) |

Note:FSR Blocks are installed directly on BMR and BMP Motors with four bolts 5/16-18UNC, 35mm long orM835-8.8;FSS Blocks are installed directly on BMS Motors with two bolts3/8-16UNC,35mm long or M10X40-8.8DIN912

# Order *Information*

| | 1 | 2 | 3 | 4 | 5 | 6 | 7 |
|---|---|---|---|---|---|---|---|
| | F | - | - | - | - | - | - |

| Pos.1 | | 2 | | 3 | | 4 | | 5 | | 6 | | 7 | |
|---|---|---|---|---|---|---|---|---|---|---|---|---|---|
| Type | | Housing Type | | Number of Spool | | Pressure settings MPa | | Flow Rate L/min | | Ports | | Paint | |
| Y | Crossover Relief Valves | RH<br>SH<br>S | BMR、BMP<br>BMS<br>BMS | A<br>B<br>D | Port A one valve-single<br>Port B one valve-single<br>Two valves-dual | 10<br>21 | 3-10 standard settings10MPa<br>8-21 standard settings 21MPa | Omit | 60 | D<br>M<br>S<br>P | G1/2<br>M22x1.5<br>7/8-14UNF<br>1/2-14NPTF | 00<br>Omit<br>B<br>S | No Paint<br>Blue<br>Black<br>Silver grey |
| S | Switch Valve | R<br>S | BMR、BMP<br>BMS | | | | | | | | | | |

Note: from the order code , please choose the right code for valve type, motor housing type, number of spool, pressure settings, flow rate, ports and paint information. If you can't find any spegification here,or if you hore special requirement ,please contact us.

# OVERCENTER VALVE WITH BRAKE PORT

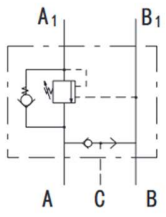

Overcenter Valve FPRA

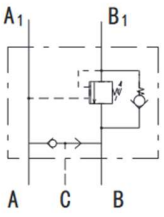

Overcenter Valve FPRB

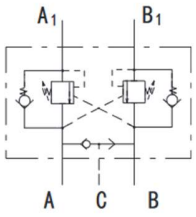

Overcenter Valve FPRD

| *Specification* | model | |
|---|---|---|
| | FPRA(B) | FPRD |
| *flow (L/min)* | 60 | |
| *pressure (Mpa)* | 7-25 | |
| *pilot ratio* | 4.25 :1 | |
| *weight (kg)* | 3.30 | 3.35 |

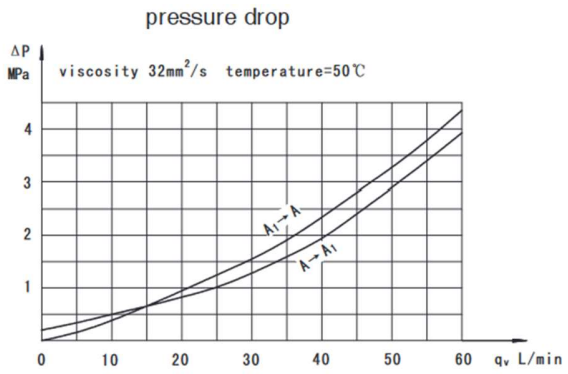


# OVERCENTER VALVE FOR FPMR MOTOR

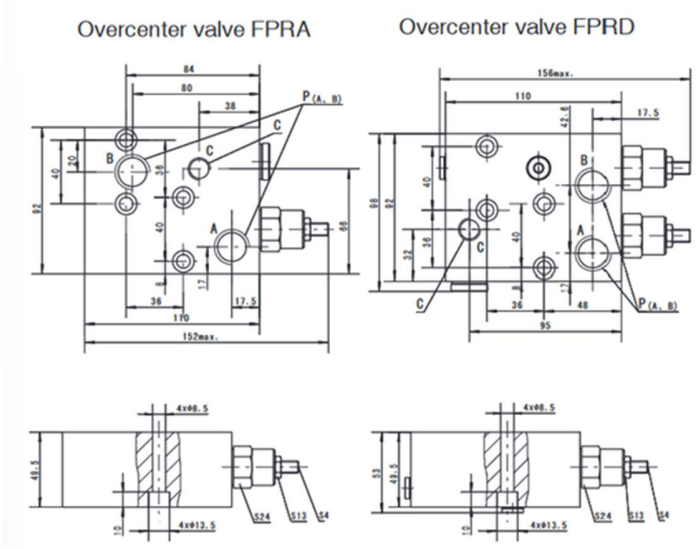


| code | P(A、B)(depth) | C(depth) |
|---|---|---|
| D | G1/2(18) | G1/4(14) |
| M | M22×1.5(18) | M14×1.5(14) |
| S | 7/8-14UNF(18) | 7/16-20UNF(14) |

Note:Valve FPR(D) is used together with FPMP or FPMR motor,4 bolts thread;5/16-18UNC or M8×50 grade 8.8

# Order *Information*

F _ 1 _ 2 _ 3 _ 4 _ 5 _ 6 _ 7

| Pos.1 | 2 | 3 | 4 | 5 | 6 | 7 |
|---|---|---|---|---|---|---|
| Type | Motor housing Type | Number of spool | Pressure settings MPa | Flow Rate L/min | Ports,Brake port | Paint |
| P Overcenter Valves | R BMR | A Pors A one valve-single<br>B Port B one valve-single<br>D Two valves-dual | 7-25 | Omit<br>60 | D G1/2,G1/4<br>M M22x1.5,M14x1.5<br>S 7/8-14UNF,7/16-20UNF | 00 No Paint<br>Omit Blue<br>B Black<br>S Silver grey |

Note: from the order code , please choose the right code for valve type, motor housing type, number of spool, pressure settings, port braking port and paint information. If you can't find any spegification here,or if you hore special requirement ,please contact us.

# CARTRIDGE TYPE OVERCENTER VALVE

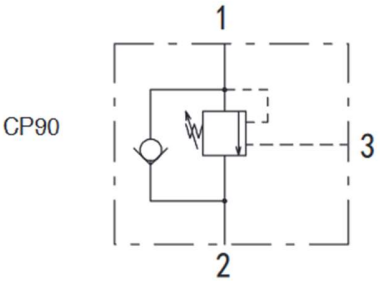


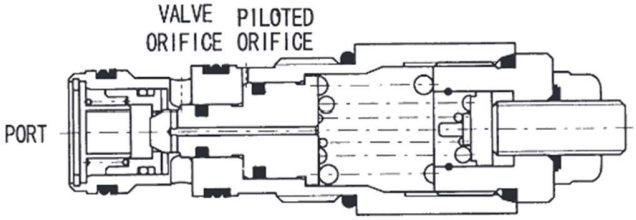


## OPERATION

The check valve allows free flow from port ② to port ① while a direct-acting,pilot-assisted relief valve controls flow from port ① to port ②, Pilot assist at port ③ lowers the effective setting of the relief valve at a rate determined, by the pilot ratio.

## FEATURES

Counterbalance valves should be set at least 13 times the maximun load induced pressure, Backpressure at port ② adds to the effective relief setting at a ratio of ① plus the pilot ratio times the backpressure

## SPECIFICATIONS

Maximum Pressure:27MPa
Relief valve setting:35MPa
Rated Flow:90L/min
Lrakage:5 drops/min
Temperature:-20℃～90℃

## DIMENSIONS

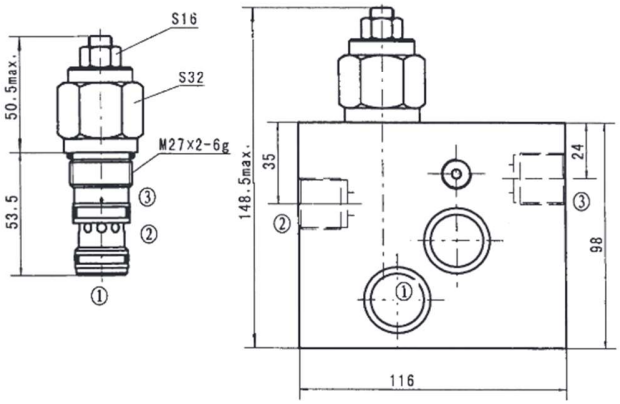


## PRESSUREDROPCURVE

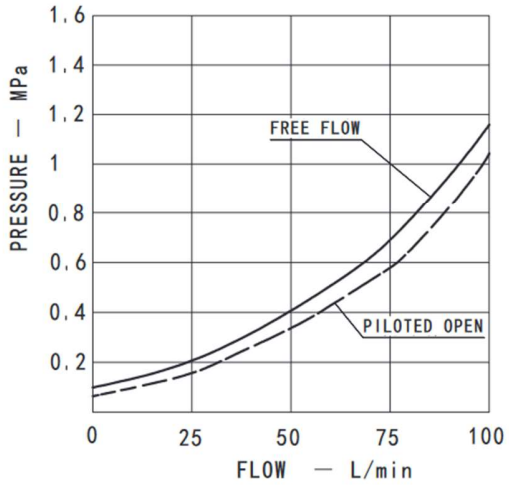


## ORDER INFORMATION

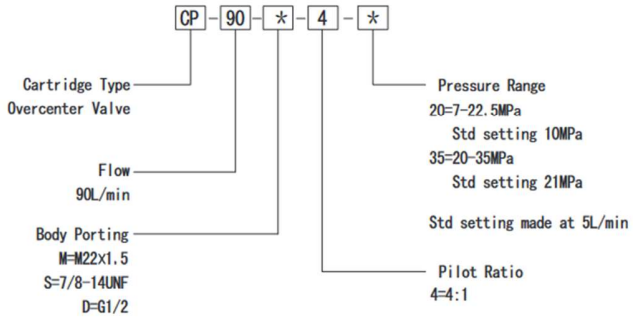

# FLUITRONICS CONTACT DATA




**Fluitronics GmbH**
Europark Fichtenhain B 2
47807 Krefeld
Fon +49 2151 4589-0

*Web contact*
www.fluitronics.com
https://www.fluitronics-shop.com

*E-mail contact*
Contact request for quote: **RFQ@fluitronics.com**
Contact technical support: **tecsupport@fluitronics.com**
Contact address for orders: **order@fluitronics.com**

